# DG4V-3-60 Design

ISSO4401 size 03; ANSI/B93.7M-D03
Solenoid operated directional valve




VICKERS by Danfoss

© Danfoss | August 2026

BC442280316180en-000202

## General description

Solenoid operated directional control valves are for directing and stopping flow at any point in a hydraulic system.

- Efficient control of greater hydraulic powers without increasing solenoid power consumption .
- Installed cost and space savings from higher power/weight-and-size ratios.
- Installation flexibility resulting from choice of numerous combinations of solenoid connectors and locations .
- Viton seals as standard for multi-fluid capability. Nitrile seals available as a model code option.
- Higher sustained machine productivity and higher uptime because of proven fatigue life and endurance, tested over 20 million cycles .
- Solenoid coils can be changed quickly and easily without leakage from hydraulic system .
- Compact, cost effective system design when used with Danfoss SystemStak™ valves and subplates .

## DG4V-3-S/R - High performance and standard performance valves

- Minimum pressure drop 2.5 bar at 30 l/min
- Range of coil connectors including DIN, Deutsch, AMP and terminal box
- Range of coil voltages and power options
- Up to 80 l/min (21 USgpm) and up to 40 l/min (10.5 USgpm) respectively at 350 bar (5000 psi) .
- Offers designers the opportunity to select the optimum value package for each application.
- International standard interface. The valve mounting face conforms to ISO 4401, size 03 and is compatible with related international standards.

## Bolt kit and seal kit:

- Interface Seal Kit number 02-147573
- Full Seal Kit part number for DG4V-3 with U or KU coils 858995
- Full Seal Kit part number for DG4V-3 with Flying lead F coils 858996
- Bolt Kit number616452 (Metric) and 590716 (Inches)

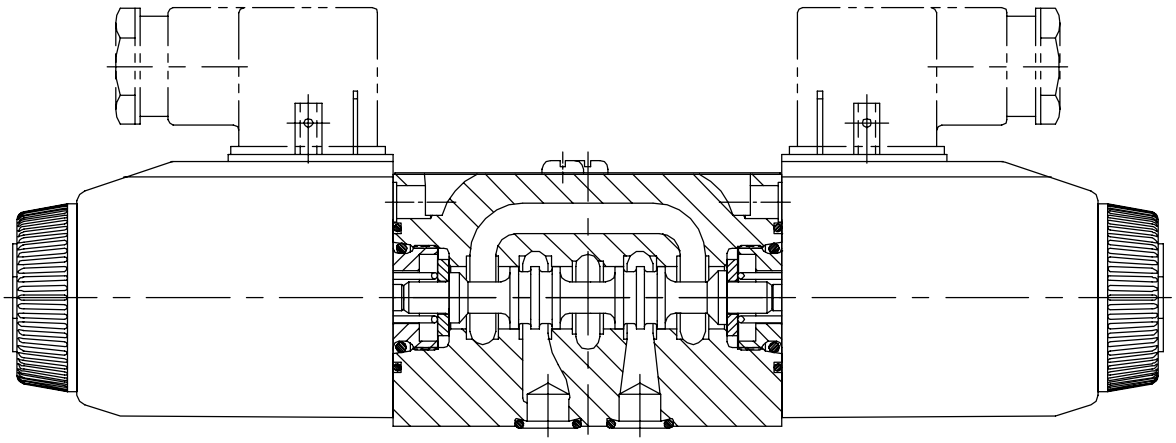

# Model code

| ** | DG4V—3 | (*) | - | ** | *(L) | - | (**) | - | (V) | M | - | (S*) | - | **** | D* | (L) | - | * | * | - | 6* | - | (EN***) |
|---|---|---|---|---|---|---|---|---|---|---|---|---|---|---|---|---|---|---|---|---|---|---|---|
| 1 | 2 | 3 | | 4 | 5 | | 6 | | 7 | 8 | | 9 | | 10 | 11 | 12 | | 13 | 14 | | 15 | | 16 |

**1 Seal type**

| | |
|---|---|
| **Blank** | Viton |
| **F6** | Buna Nitrile/High CAN |

**2 Model series**

| | |
|---|---|
| **D** | Directional |
| **G** | Gasket mounted |
| **4** | Solenoid operated |
| **V** | Pressure rating 350 bar (5000 psi) on P, A & B ports |
| **3** | ISO4401 Size 03 |

**3 Performance**

| | |
|---|---|
| **R** | Standard performance with 8 watt coil |
| **Blank** | High performance |
| **S** | Standard performance X5 only |

**4 Spool type**

Please refer functional symbols on Page 4 for spool types .

**5 Spool spring arrangement**

| | |
|---|---|
| **A** | Spring offset, end-to-end |
| **AL** | Same as "A" but left hand build |
| **B** | Spring offset, end to center |
| **BL** | Same as "B" but left hand build |
| **C** | Spring centered |
| **N** | No-spring detented |

**6 Manual override option**

| | |
|---|---|
| **Blank** | Plain override(s) in solenoid end(s) only ▲ |
| **H** | Water-resistant override(s) on solenoid end(s) |
| **Z** | No overrides at either end |
| **W** | Twist and lock override in solenoid ends• ▲ |
| **▲** | No override in non-solenoid end of single solenoid valves |
| **•** | DC high performance only |

**7 Solenoid Energization identity**

| | |
|---|---|
| **Blank** | None |
| **V** | Solenoid "A" is at port "A" end and/ or solenoid "B" is at port "B" end, independent of spool type |
| **Note:** | Used to select the identification of the solenoid . Refer to table on page 4. |

**8 Flag symbol**

| | |
|---|---|
| **M** | Electrical options and features |

**9 Spool indicator switch**

| | |
|---|---|
| **S7** | Spool position monitoring switch. Single solenoid valves only. |
| **Note** | Refer page 6 and 10 for further details |
| **S9** | **Spool position monitoring switch Refer to separate catalogue - BC458770480968en-000102** |

**10 Coil type**

| | |
|---|---|
| **U** | ISO4400, DIN43650 connector |
| **U1** | ISO4400 fitted with PG11 plug |
| **KU** | Top exit flying lead (150mm) |
| **KUP4** | Junior timer (Amp) connector |
| **KUP5** | Integral Deutsch connector |
| **FPM4** | 4-Pin micro - (12mm) brad Harrison connector |
| **KUPM4L** | Integral M12, 4-Pin connector |
| **FW** | Flying lead wIth 1/2 NPT thread wiring housing |
| **FTW** | Fly. Lead wired terminal block & 1/2" NPT thread wiring housing |
| **FPA3W** | Fly. Lead, 3 Pin connector & 1/2" NPT thread wiring housing |
| **FPA5W** | Fly. Lead, 5 pin connector & 1/2" NPT thread wiring housing |
| **KUP6** | Flying lead external to coil with Deutsch connector |
| **KUP7** | Packard connector pins (male) |
| **KUP8** | Special packard connector pins with seals (female) |
| **X5** | Atex approved coil, 'd' type ▲ |
| | ▲ Also CSA and UL approved |
| **X6** | **MA and CCC approved coil. Details refer user guide AF459779399265zh-000101** |

**11 Solenoid indicator lights**

| | |
|---|---|
| **Blank** | None |
| **L** | Solenoid indicator lights ▲ |
| | ▲ Flying lead coil type only excluding FPA**W |

**12 Surge suppressor/ damper**

| | |
|---|---|
| **D1** | Diode positive bias |
| **D2** | Negative bias |
| **D7** | Transorb type |
| | See Page 14 for circuit details |

**13 Coil rating**

| | |
|---|---|
| **B** | 110V AC 50Hz/120V AC 60 Hz |
| **D** | 220V AC 50 Hz/240V AC 60 Hz |
| **DS** | 28V DC 30 watt |
| **G** | 12V DC |
| **GL** | 12V DC |
| **H** | 24V DC |
| **HL** | 24V DC |
| **HM** | 24V DC 8 watt |
| | *HM COIL IS DG4V-3-R Standard performance with 8 Watt coil |

**14 Tank pressure rating**

Refer to "Operating Data" for port T pressure ratings .

| | |
|---|---|
| **4** | 70 bar (1000 psi) ▲ |
| **6** | 207 bar (3000 psi) for AC high performance models, DG4V-3, including spool position indicator type S7. |
| **7** | 207 bar (3000 psi) for DC high performance models, DG4V-3, including spool position indicator type S7. |
| **8** | 160 bar (2300 psi) for AC high performance models with lower tank port rating . |
| | ▲ X5 coil type only |

**15 Design number**

| | |
|---|---|
| **60** | Basic design |
| **61** | Type 8 spool |

**16 Special features**

| | |
|---|---|
| **"EN***"** | Code number assigned as required . |
| **EN21** | CSA approved models . |
| **EN38** | Low leakage version . Typical leakage 5ml/ min/land at 100 bar. |
| **Note:** | EN38 valve spools have additional overlap and resulting 2X pressure drop compared to standard valve spools . |

# Functional Symbols

## Spool Options 4 & 5

### 5 Spool & Spring Arrangements

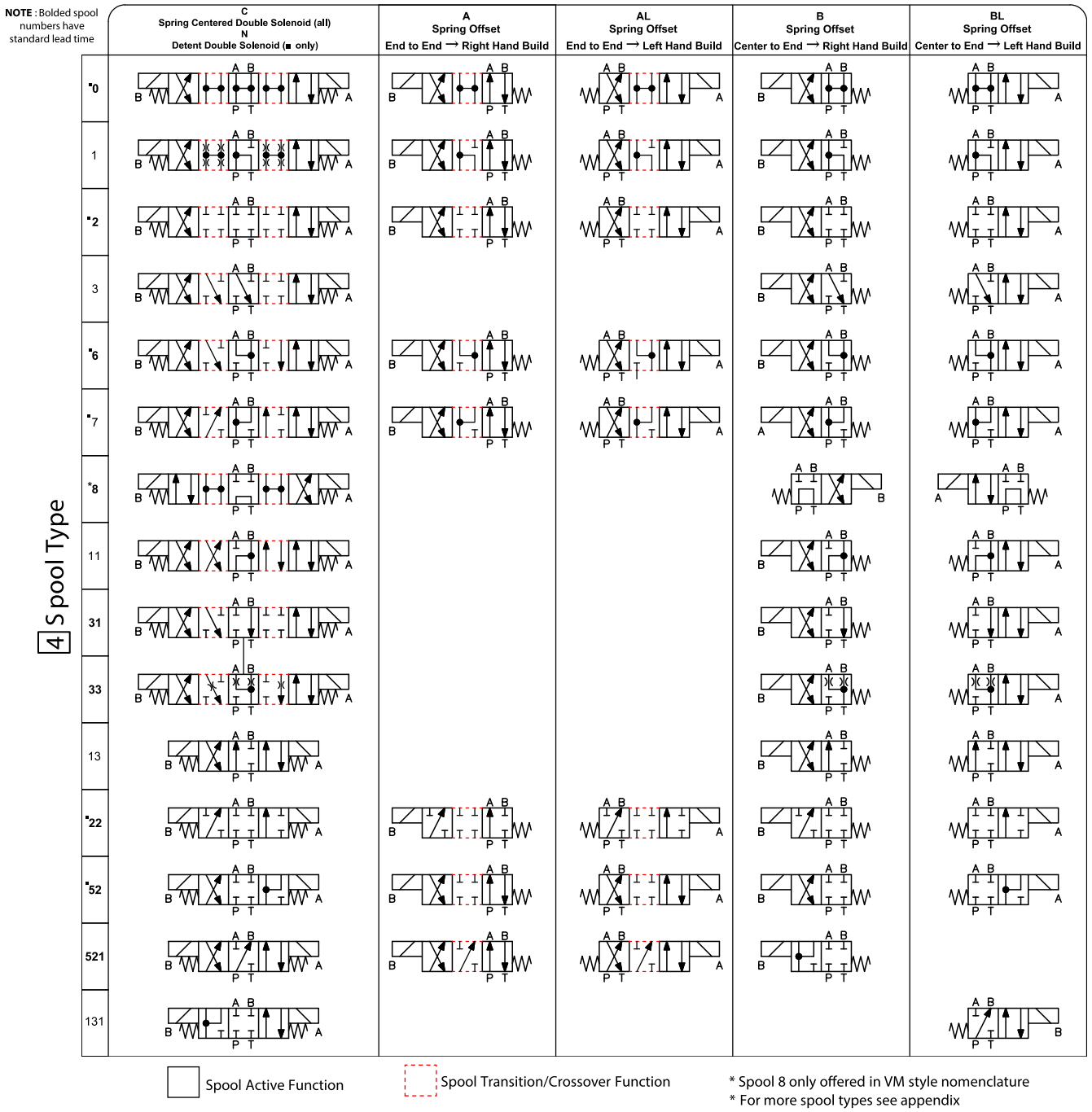


# Electrical Nomenclature

## Electrical Options 7 & 8

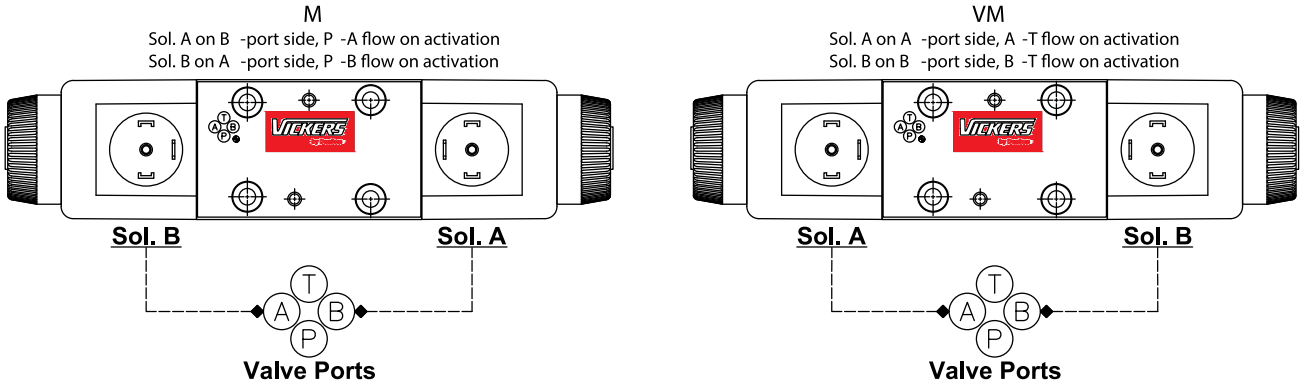

| Feature | DG4V-3 | DG4V-3S X5 only | DG4V-3R |
|---|---|---|---|
| Pressure limits P, A and B ports | 350 bar (5075 psi) | 350 bar (5075 psi) ■ | 350 bar (5075 psi) |
| T port: | 210 bar (3045 psi) | 70 bar (1000 psi) | 210 bar (3045 psi) |
| Flow rating | See performance data | See performance data | See performance data |
| Relative duty factor | Continuous; ED = 100% | Continuous; ED = 100% | Continuous; ED = 100% |
| Type of protection: ISO 4400 coils with plug fitted correctly | IEC 144 class IP65 | IEC 144 class IP66 | IEC 144 class IP65 |
| Coil winding | Class H | Class H | Class H |
| Lead wires (coils type F***) | Class H | Class H | Class H |
| Coil encapsulation | Class F | Class F | Class F |
| Maximum | Permissable voltage fluctuation:<br>Refer to temperature limits. Refer to temperature limits. Refer to Temperature Limits | | |
| Minimum | 90% rated | 90% rated | 90% rated |
| **MTTF'd information according to ISO 13849 - 150 years** | | | |
| Typical response times at 100% rated volts measured from application/removal of voltage to full spool displacement of "2C" spool at: | | | |
| Flow rate P-A, B-T | 40 l/min (10.6 USgpm) | 20 l/min (5.3 USgpm) | 20 l/min (5.3 Usgpm) |
| Pressure | 175 bar (2537 psi) | 175 bar (2537 psi) | 175 bar (2527 PSI) |
| AC (~) energizing | 15 ms | 100 ms | 18 ms |
| AC (~) de–energizing | 23 ms | 100 ms | 32 ms |
| DC (=) energizing | 45 ms | 60 ms | 60 ms |
| DC (=) de–energizing | 28 ms | 40 ms | 40 ms |

| Power consumption, AC solenoids (for coils listed in model code). | Initial VA (RMS) ▲ | Holding VA (RMS) | Initial VA (RMS) ▲ | Holding VA (RMS) | Initial VA (RMS) | Holding VA (RMS) |
|---|---|---|---|---|---|---|
| Full power coils: | | | | | | |
| Dual frequency coils at 50 Hz | 280 | 61 | 280 | 61 | N/A | |
| Dual frequency coils at 60 HZ | 300 | 58 | 300 | 58 | N/A | |
| Low power coils, "BL" and "DL": (Not available with "N" – No-spring detented models) | 170 | 37 | N/A | N/A | N/A | |
| Dual frequency coils at 50 Hz | 190 | 37 | N/A | N/A | N/A | |
| Dual frequency coils at 60 Hz | – | – | – | – | N/A | |
| Power consumption, DC solenoids at rated voltage and 20 C (68 F). | | | | | | |
| Full power coils: | | | | | | |
| 12V, model type "G" | 30W | – | 30W | – | N/A | |
| 24V, model type "H" | 30W | – | 30W | – | N/A | |
| Low power coils: | | | | | | |
| 12V, model type "GL" | 18W | | N/A | – | N/A | |
| 24V, model type "HL" | 18W | | N/A | – | N/A | |
| 24V, HM Coil | N/A | | N/A | – | 8W | |

■ For applications where valves are to remain pressurized (either energized or de-energized) at pressures over 210 bar (3045 psi) without frequent switching, it is recommended to use the high performance model, DG4V-3.

▲ 1st half cycle; armature fully retracted.

# Operating data

Spool Position Indicator Models

Spool/spring arrangement types 0A, 0B, 2A, 2B, 22A, 23A, 35A, 52B, 3B, 6B

DC model type “S7”

This product has been designed and tested to meet specific standards outlined in the European Electromagnetic Compatibility Directive (EMC) 2004/108/EC. For instructions on installation requirements to achieve effective protection levels see this leaflet and the Installation Wiring Practices for Vickers Electronic Products leaflet 2468. Wiring practices relevant to this Directive are indicated by
⚠ Electromagnetic Compatibility (EMC).

| | |
|---|---|
| Input: | |
| Supply Voltage | 20-32 VDC |
| Reverse Pol. Protection | Yes |
| | outputs with alternating function - PNP |
| Output: | |
| Max output load | <=400mA ; Duty Ratio 100% |
| Short Circuit Protection | Yes |
| Hysteresis | <=0.05mm |
| Electrical connector | M12x1 4-Pole |
| Thermal shift | <=±0.1mm |
| Plug connections: | |
| Pin 1 | + Supply |
| Pin 2 | Normal Closed |
| Pin 3 | 0V |
| Pin 4 | Normal Open |
| EMC | Protection DIN EN 61000-6-1/2/3/4, Aug 2002 |
| Humidity | 0-95% rel. (nach DIN 40040) |
| Protection Class | IP65 DIN 40050 |
| Vibration 0-500Hz | Max. 20g |
| Shock | Max. 50g |

• Factory setting ensures this condition under all combinations of manufacturing tolerance and of temperature drift (see “Temperature limits”).

Wiring Connections

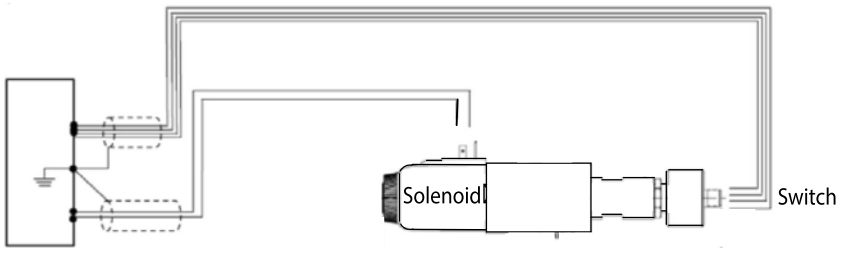


Warning
All power must be switched off before connecting or disconnecting any plugs.

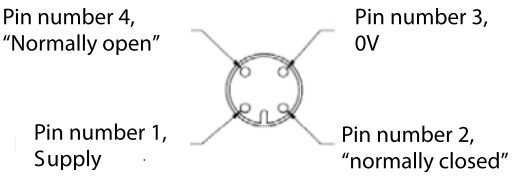


MI2 4 PIN CONNECTOR DETAILS

Customer’s protective ground connection

WARNING: Electromagnetic Compatibility (EMC)
It is necessary to ensure that the unit is wired up in accordance with the connection arrangements shown above. For effective protection the user’s electrical cabinet, the valve subplate or manifold and the cable screens should be connected to efficient ground points.
In all cases both valve and cable should be kept as far away as possible from any sources of electromagnetic radiation such as cables carrying heavy current, relays and certain kinds of portable radio transmitters, etc. Difficult environments could mean that extra screening necessary to avoid the interference.

## DG4V-3 models (high performance)

Typical with mineral oil at 36 cSt (168.6 SUS) and a specific gravity of 0.87.

**Maximum flow rates**

Performance based on full power solenoid coils warm and operating at 90% rated voltage.

**Graph 1**
AC solenoid valves operating at 50 Hz

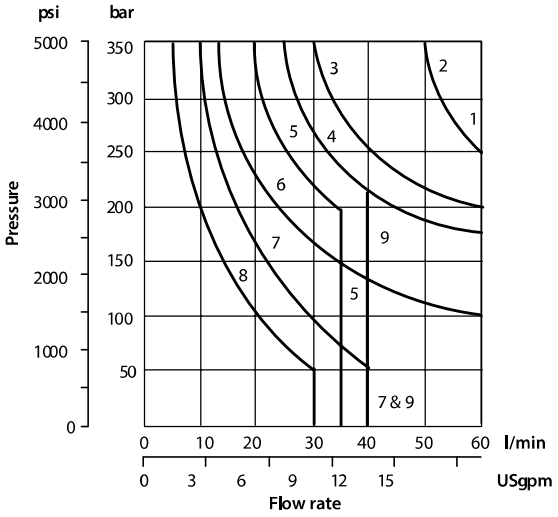


**Graph 2**
AC solenoid valves operating at 60 Hz

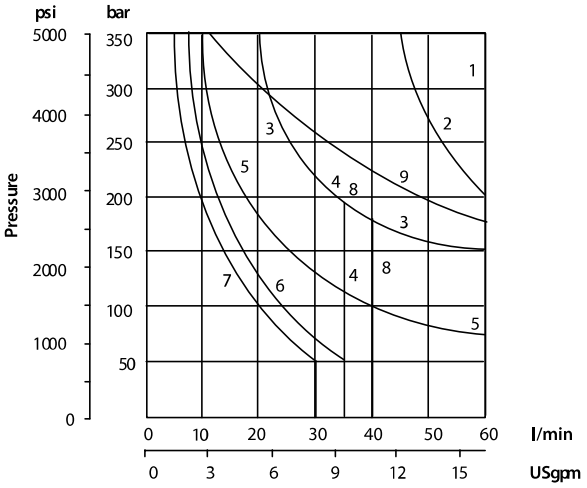


**Graph 3**
DC solenoid valves

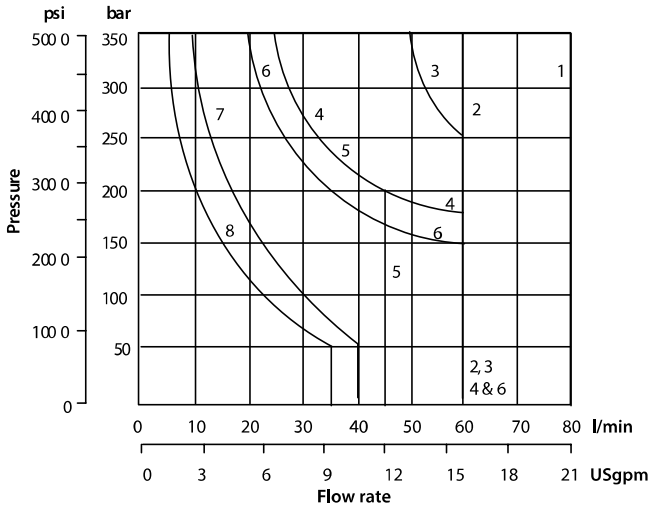


| Spool / spring code | Graph 1 curve | Graph 2 curve | Graph 3 curve |
|---|---|---|---|
| 0A(L) | 2 | 2 | 3 |
| 0B(L) & 0C | 1 | 1 | 2 |
| 2A(L) | 2 | 2 | 3 |
| 2B(L) & 2C | 1 | 1 | 1 |
| 2N | 1 | 1 | 2 |
| 6B(L) & 6C | 6 | 5 | 6 |
| 8B(L) & 8C | 5▲ | 4▲ | 5▲ |
| 22A(L) | 8 | 7 | 8 |
| 22B(L) & 22C | 7 | 6 | 7 |
| 33B(L) & 33C | 4 | 3 | 4 |
| 52BL, 52C | 6 | 5 | 6 |
| 521B | 6 | 5 | 6 |

▲ Consult Danfoss regarding each application that will jointly have flow rates approaching this curve and a pressurized volume exceeding 2000 cm3 (122 cu.in.)

# Performance data

## Pressure drops

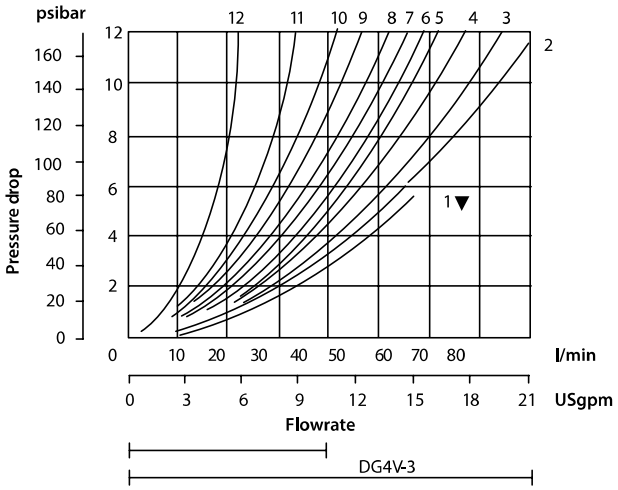


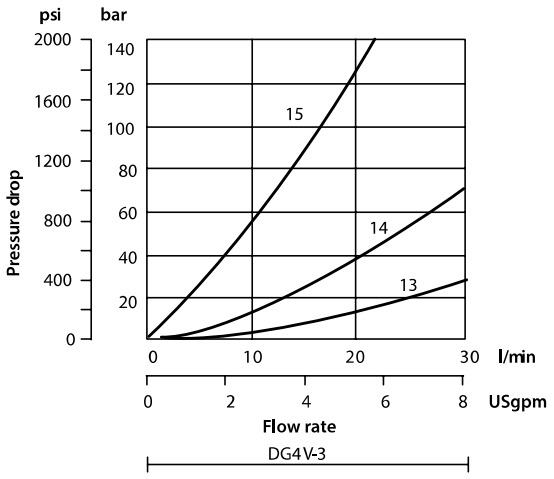


▼Curve for spooltype 6: not recommended for flows inexcess of 60 l/min(15 .8 USgpm).

## Pressure drops in offset positions except where otherwise indicated

| Spool / spring code | Spool positions covered | P to A | P to B | A to T | B to T | P to T | B to A or A to B |
|---|---|---|---|---|---|---|---|
| 0A(L) | Both | 5 | 5 | 2 | 2 | - | - |
| 0B(L) & 0C | De-energized | - | - | - | - | 4▲Δ | - |
| | Energized | 4 | 4 | 2 | 2 | - | - |
| 2A(L) | Both | 6 | 6 | 5 | 5 | - | - |
| 2B(L) & 2C | Energized | 5 | 5 | 2 | 2 | - | - |
| 2N | Both | 6 | 6 | 3 | 3 | - | - |
| 6B(L) & 6C | De-energized | - | - | 3▲ | 3Δ | - | - |
| | Energized | 6 | 6 | 1 | 1 | - | - |
| | Energized | 4 | 4 | 3▲ | 3 | - | - |
| 8B(L) & 8C | All | 9 | 9 | 5 | 5 | 3 | - |
| 22A(L), 22B(L) & 22C | All | 6 | 6 | - | - | - | - |
| 33B(L) & 33C | De-energized | - | - | 15▲ | 15Δ | - | - |
| | Energized | 5 | 5 | 2 | 2 | - | - |
| 52BL & 52C | Energized | 6▲ | 6Δ | 2 | - | - | 10❍ |
| | Energized | 6▲ | 6Δ | 2 | - | - | 10❍ |
| 521B | All | 6▲ | 6Δ | - | - | - | 10❍ |
| | De-energized | - | - | 10▲ | 11Δ | - | 10❍ |
| | Energized | 6 | 6Δ | - | - | - | 10❍ |

▲B" plugged Δ "A" plugged ❍ "P" plugged

## Viscosity cSt (SUS)

| 14 (71.75) | 20 (97.8) | 43 (200) | 54 (251) | 65 (302) | 76 (352) | 85 (399) |
|---|---|---|---|---|---|---|
| % of ΔP (Approx.) | | | | | | |
| 81 | 88 | 104 | 111 | 116 | 120 | 124 |

For other viscosities, pressure drops approximate to:

A change to another specific gravity will yield an approximately **proportional change in pressure drop**. The specific gravity of a fluid may be obtained from its producer. Fire resistant fluids usually have higher specific gravities than oil.

## Models for use with ISO 4400 (DIN 43650) connectors

Double solenoid models

DG 4V-3 -*C- **-(V)M-U-**-60
DG 4V-3 -*N- **-(V)M-U -**-60

Single solenoid models

DG4 V-3 -*A(-**) ■
DG4 V-3 -*B(-**) ■
DG4 V-3 -8BL(-**)
] As sh own

DG4 V-3 -*AL(-**)
DG4 V-3 -*BL(-**)
DG4 V-3 -8B(-**)
] Solenoid and end cap inter changed

3rd angle projection

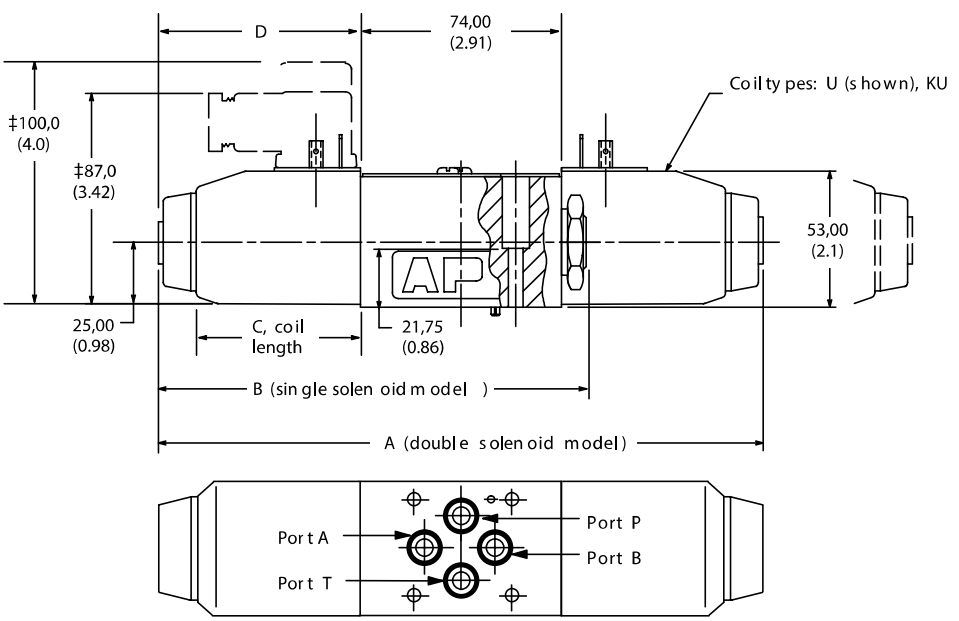


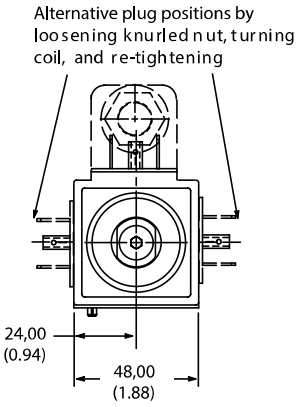


■ Not applicable to type "8" spool .

‡ Can vary dependent on source of plug .

Dimensions in mm (in).

| Model type | AC or DC | A Dim. | B Dim. | C Dim. | D Dim. |
|---|---|---|---|---|---|
| All | DC = | 220 (8.66) | 156 (6.14) | 61 (2.5) | 73 (2.87) |
| DG4V-3 | AC ~ | 200 (7.87) | 146 (5.75) | 51 (2.1) | 63 (2.48) |

## DG4V-3-*-A/B(L)-(V)M-S7-U-**--60

Single solenoid models with Inductive type switch indicating when the spool is in the spring off-set position. Refer Page 6 connection to switch .

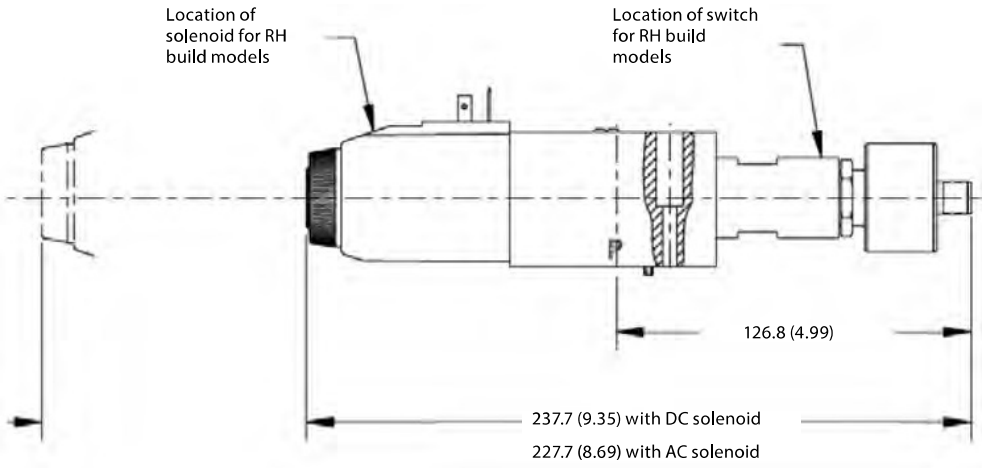


For coil removal :
64 (2.51) DC coil
54 (2.12) AC coil

# Installation dimension

## Models with “F” type coils (lead wires) and conduit box.

Double solenoid models
DG4V-3 -*C-**-(V)M-F-**-60
DG4V-3 -*N-**-(V)M-F-**-60

Single solenoid models
DG4V-3-*A(-**)•
DG4V-3-*B(-**)•
DG4V-3-8BL(-**)

As shown

Single solenoid models
DG4V-3 -*AL(-**)•
DG4V-3 -*BL(-**)•
DG4V-3 -8B(-**)

Solenoid and end cap interchanged

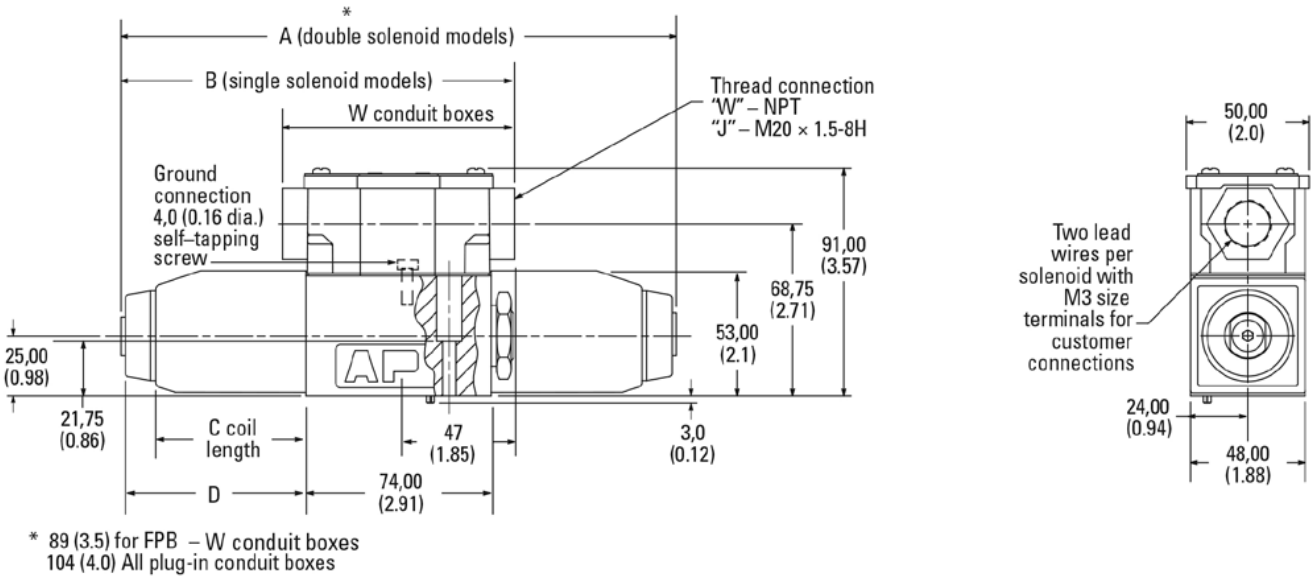


Dimensions in mm(in).

| Model type | AC or DC | A Dim. | B Dim. | C Dim. | D Dim. |
|---|---|---|---|---|---|
| All | DC = | 220 (8.66) | 156,5 (6.14) | 61 (2.5) | 73 (2.87) |
| DG4V-3 | AC ~ | 200 (7.87) | 146,5 (5.75) | 51 (2.1) | 63 (2.48) |

**Codes FJ” and “FW”:** 2 lead wires for each solenoid, approximately 150,00 (6 .00) long . M3 (#6) terminals provided for customer connection .

**Codes “FTJ” and “FTW”:** Valve supplied with lead wires connected into terminal strip suitable for M3 (#6) terminals for customer connection .

# Installation dimension

## M12 Connector type

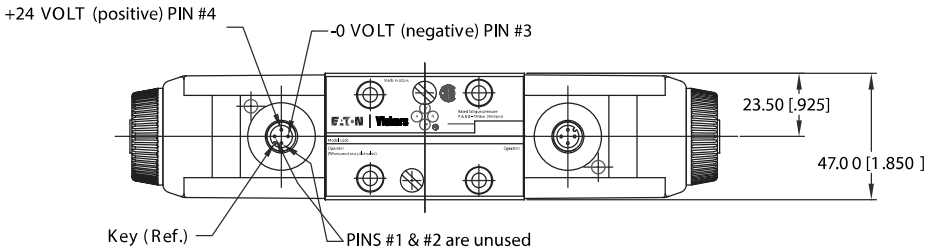


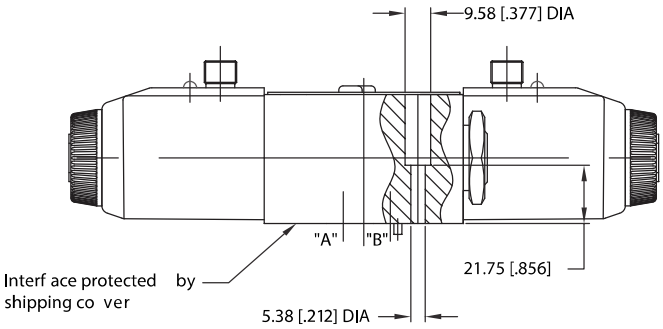


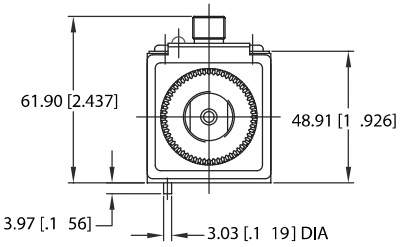


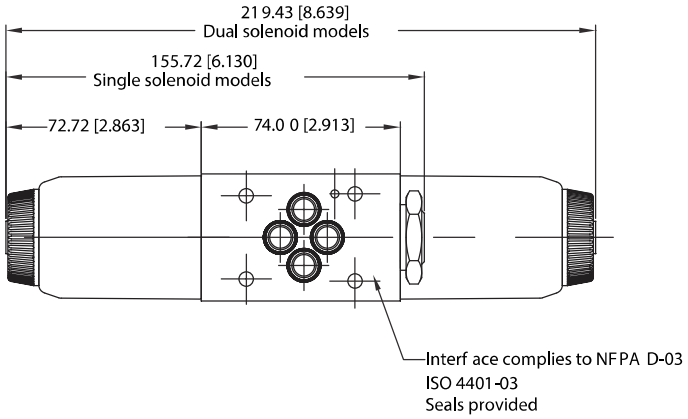


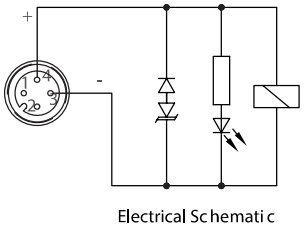


Electrical Sc hemati c

# Electrical plugs and connectors

U/U1/U6

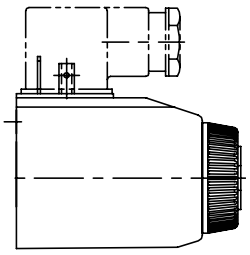

**DIN connector**

KU

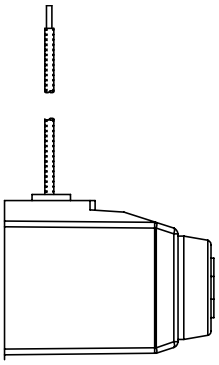

**Top exit flying lead**

KUP4

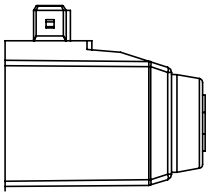

**Junior timer AMP**

KUP5

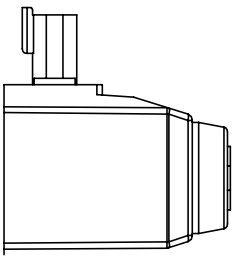

**Deutsh**

X5

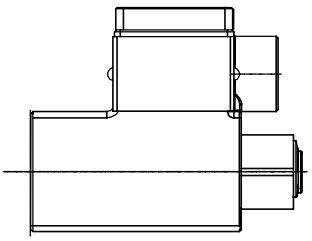

**Explosion Proof**

## DIN 43650 Connector

**Cable diameter range:** Ø6–10 mm (0 .24–0 .40 in)

**Wire section range:** Ø,5–1,5 mm2 (0 .0008–0 .0023 in2)

**Terminals:** Screw type

**Type of protection:** IEC144 class IP65, when plugs are fitted correctly to the valves with interface seals (supplied with plugs) in place .

Connector can be positioned at 90° intervals on valve by re-assembling contact holder into appropriate position inside connector housing .

Connectors with and without indicator lights are available (order separately) .

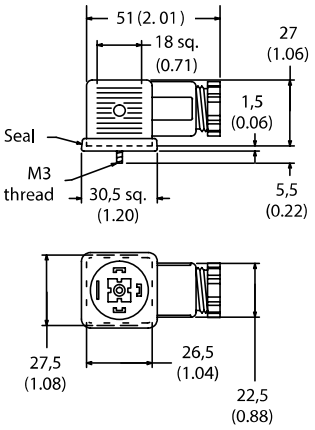


**KUP 7**

**Packard connector pins - Male**

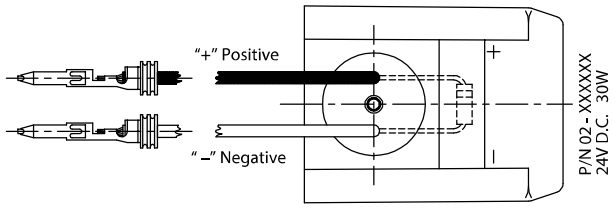


**KUP 8**

**Special packard connector pins with seals - Female**

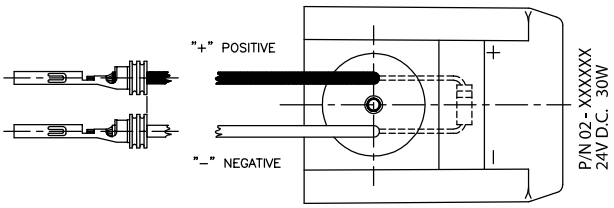

## Terminal strip and lights

For valves with type "F" coils .

**a.** For DC coils the +ve lead(s) must be connected to the terminal(s) marked + . When using 3-wire incoming leads to double solenoid valves (i .e. common neutral) the inner pair of terminals must be interconnected .

**b.** For correct light indication of energized solenoid ensure that solenoid leads are correctly connected: light terminals are common with each outer pair of solenoid terminals according to the side with + mark .

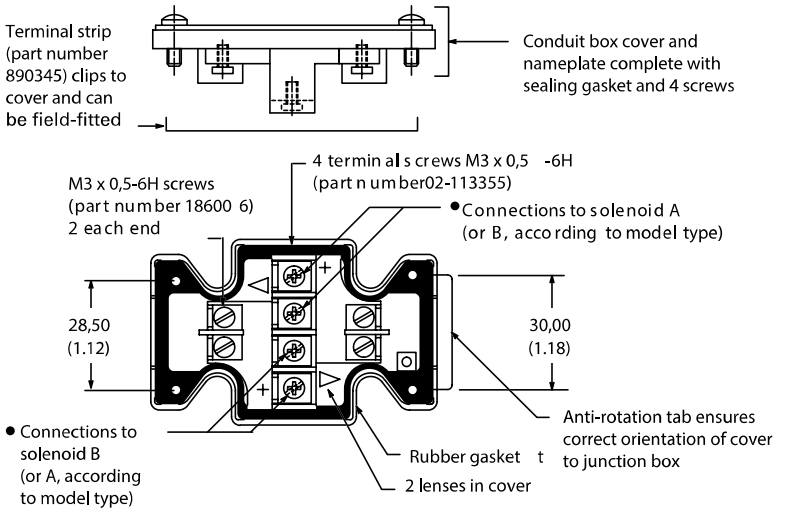


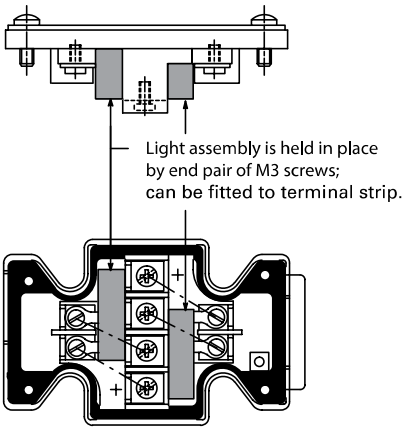


## Insta-Plug

DG4V-3---FPA---60

Danfoss 2-part "Insta-Plug" eliminates breaking electrical inputs for valve disconnect . A male half is pre-wired to the valve body . The mating plug is inside a wire housing with external terminals for machine wire connections . Captive thumb screws, when loosened, permit the wire housing to be pulled clear of the valve for disconnect. A longer ground post provides first make/ last break ground connection .

## PA configuration

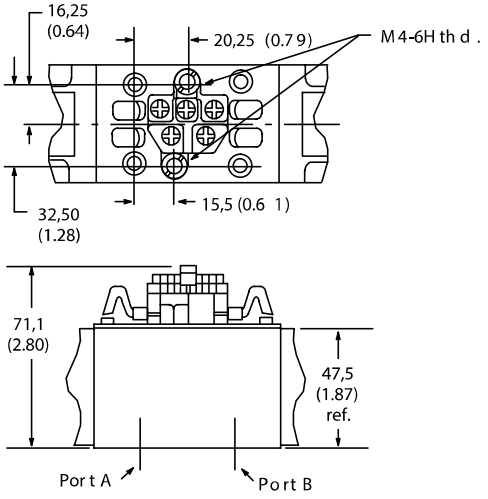

## NFPA Connector T3.5.29-1980

DG4V-3–FPA3W(L)-**-60

DG4V-3–FPA5W(L)-**-60

The receptacle is a standard three or five pole connector with shortened leads and terminals added . The five pole plug has four leads 101,6 (4 .0) long and one 177,8 (7 .0) long. The three pole plug has two leads 101,6 (4 .0) long and one 177,8 (7 .0). All wires have underwriters recognized non-solder insulated eyelet terminals . The green wire is used for the ground (earth) connection (No . 8 screw furnished) . Valves are supplied pre-wired .

**Connection details and model type/model code references**

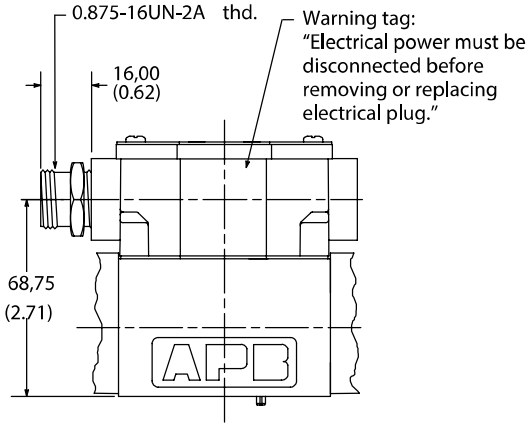


## 3 pin connector

**Use with single solenoid valve Key model code designations:**

DG4V-3 -*A(L)(-**)-(V)
MFPA3W(L)

DG4V-3-*B(L)(-**)-(V)
MFPA3W(L)

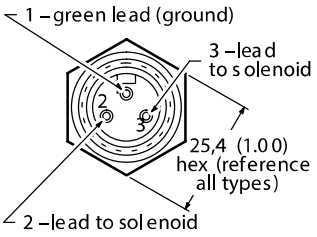


## 5 pin connector

**Use with single solenoid valve Key model code designations:**

DG4V-3-*A(L)(-**)-(V)
MFPA5W(L)

DG4V-3-*B(L)(-**)-(V)
MFPA5W(L)

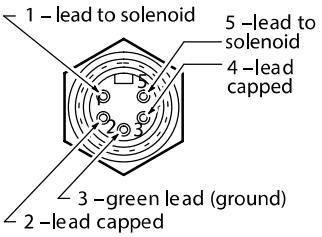


### Surge suppression devices (for DC valves) Standard diode (D1), (D2)

Diode in parallel with coil, positive bias . When switch (S1) is opened, the energy stored in the coil is trapped and dissipated by the diode (D1), (D2) .

- Works only with DC voltage
- Polarity dependent
- Increase drop out time

### Surge suppression devices (for DC valves) Standard diode (D2)

Diode in parallel with coil, negative bias . When switch (S1) is opened, the energy stored in the coil is trapped and dissipated by the diode (D2) .

- Works only with DC voltage
- Polarity dependent
- Increase drop out time

### Transzorb (D7)

Diode and Zener diode in parallel with coil . When switch (S1) is opened, the energy stored in the coil is trapped and dissipated by the diode (D1) and Zener diode (Z1) and the coil resistance .

- The Zener makes exact limitation of inductive spikes .
- Works only with DC
- Polarity dependent

**Valve shift and dropout times with and without surge suppression**

| Shift | Dropout | |
|---|---|---|
| CETOP 3 | | |
| Do Diode | 23 | 60 |
| Diode Alone | 23 | 131 |
| Diode/Zener | 23 | 78 |

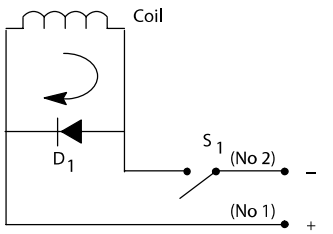


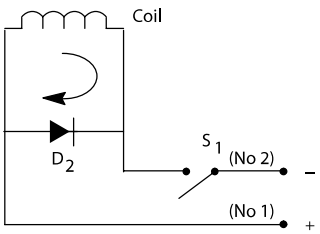


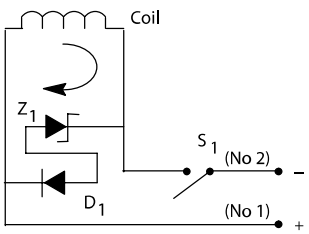


**Note:** These surge suppression devices are "Polarity Dependent ." Proper biasing conditions must be met when installing/connecting a coil in a system . Times represent cessation/application of voltage to coil versus velocity (start/stop) of a cylinder using a single solenoid, spring offset valve (time in milliseconds) .