Doc. No. AF∗-OMX0052-D

Operation Manual

PRODUCT NAME

Air Filter

MODEL / Series / Product Number

AF20-(F,N)01～(F,N)02(B,C)(-2,6,C,J,L,R,Z)-D

AF30-(F,N)02～(F,N)03(B,C,D)(-2,6,8,J,L,R,W,Z)-D

AF40-(F,N)02～(F,N)04(B,C,D)(-2,6,8,J,L,R,W,Z)-D

AF40-(F,N)06(B,C,D)(-2,6,8,J,R,W,Z)-D

AF50-(F,N)06～(F,N)10(B,C,D)(-2,6,8,J,L,R,W,Z)-D

AF60-(F,N)10(B,C,D)(-2,6,8,J,L,R,W,Z)-D

SMC Corporation

Contents

	Page
1. Safety Instructions	2-7
2. Application	8
3. Standard Specifications	8
4. How to Order	9
5. Structural Drawing, Option and Replacement Parts	10
6. Bowl Assembly Specifications	11-18
7. Assembly of Optional Parts	19
8. Operation and Adjustment	20-21
9. Trouble Shooting	22
10. How to Replace the Components	23-28
10-1. Bowl Assembly Replacement	23-25
10-2. Element Replacement	26-28
11. Disassembly Drawing	29
12. Dimensions	30

Safety Instructions

These safety instructions are intended to prevent hazardous situations and/or equipment damage. These instructions indicate the level of potential hazard with the labels of **"Caution," "Warning"** or **"Danger."** They are all important notes for safety and must be followed in addition to International Standards (ISO/IEC)[*1)], and other safety regulations.

*1) ISO 4414: Pneumatic fluid power - General rules and safety requirements for systems and their components
ISO 4413: Hydraulic fluid power - General rules and safety requirements for systems and their components
IEC 60204-1: Safety of machinery - Electrical equipment of machines - Part 1: General requirements
ISO 10218-1: Robots and robotic devices - Safety requirements for industrial robots - Part 1:Robots
etc.

Danger	**Danger** indicates a hazard with a high level of risk which, if not avoided, will result in death or serious injury.
Warning	**Warning** indicates a hazard with a medium level of risk which, if not avoided, could result in death or serious injury.
Caution	**Caution** indicates a hazard with a low level of risk which, if not avoided, could result in minor or moderate injury.

Warning

1. The compatibility of the product is the responsibility of the person who designs the equipment or decides its specifications.
Since the product specified here is used under various operating conditions, its compatibility with specific equipment must be decided by the person who designs the equipment or decides its specifications based on necessary analysis and test results. The expected performance and safety assurance of the equipment will be the responsibility of the person who has determined its compatibility with the product. This person should also continuously review all specifications of the product referring to its latest catalog information, with a view to giving due consideration to any possibility of equipment failure when configuring the equipment.

2. Only personnel with appropriate training should operate machinery and equipment.
The product specified here may become unsafe if handled incorrectly. The assembly, operation and maintenance of machines or equipment including our products must be performed by an operator who is appropriately trained and experienced.

3. Do not service or attempt to remove product and machinery/equipment until safety is confirmed.
1. The inspection and maintenance of machinery/equipment should only be performed after measures to prevent falling or runaway of the driven objects have been confirmed.
2. When the product is to be removed, confirm that the safety measures as mentioned above are implemented and the power from any appropriate source is cut, and read and understand the specific product precautions of all relevant products carefully.
3. Before machinery/equipment is restarted, take measures to prevent unexpected operation and malfunction.

4. Our products cannot be used beyond their specifications. Our products are not developed, designed, and manufactured to be used under the following conditions or environments. Use under such conditions or environments is not covered.
1. Conditions and environments outside of the given specifications, or use outdoors or in a place exposed to direct sunlight.
2. Use for nuclear power, railways, aviation, space equipment, ships, vehicles, military application, equipment affecting human life, body, and property, fuel equipment, entertainment equipment, emergency shut-off circuits, press clutches, brake circuits, safety equipment, etc., and use for applications that do not conform to standard specifications such as catalogs and operation manuals.
3. Use for interlock circuits, except for use with double interlock such as installing a mechanical protection function in case of failure. Please periodically inspect the product to confirm that the product is operating properly.

Safety Instructions

⚠ Caution

We develop, design, and manufacture our products to be used for automatic control equipment, and provide them for peaceful use in manufacturing business.
Use in non-manufacturing business is not covered.
Products we manufacture and sell cannot be used for the purpose of transactions or certification specified in the Measurement Act.
The new Measurement Act prohibits use of any unit other than SI units in Japan.

Limited warranty and Disclaimer/Compliance Requirements

The product used is subject to the following “Limited warranty and Disclaimer” and “Compliance Requirements”. Read and accept them before using the product.

Limited warranty and Disclaimer

1. The warranty period of the product is 1 year in service or 1.5 years after the product is delivered, whichever is first.*2)
   Also, the product may have specified durability, running distance or replacement parts. Please consult your nearest sales branch.
2. For any failure or damage reported within the warranty period which is clearly our responsibility, a replacement product or necessary parts will be provided.
   This limited warranty applies only to our product independently, and not to any other damage incurred due to the failure of the product.
3. Prior to using SMC products, please read and understand the warranty terms and disclaimers noted in the specified catalog for the particular products.

***2) Vacuum pads are excluded from this 1 year warranty.**
A vacuum pad is a consumable part, so it is warranted for a year after it is delivered.
Also, even within the warranty period, the wear of a product due to the use of the vacuum pad or failure due to the deterioration of rubber material are not covered by the limited warranty

Compliance Requirements

1. The use of SMC products with production equipment for the manufacture of weapons of mass destruction (WMD) or any other weapon is strictly prohibited.
2. The exports of SMC products or technology from one country to another are governed by the relevant security laws and regulations of the countries involved in the transaction. Prior to the shipment of a SMC product to another country, assure that all local rules governing that export are known and followed.

Precautions for Design

⚠ **Warning**

(1) Do not use the product if no leakage is allowed due to the environment, or if the fluid is not air.

(2) Polycarbonate resin is used for the external parts including the bowl. Organic solvents including thinner, acetone, alcohol and ethylene chloride; chemicals including sulphuric acid, nitric acid and hydrochloric acid; cutting oil, synthetic oils, ester-based compressor oil, alkali, kerosene, gasoline, lock material of screw are harmful. Do not use the product where these are present.

Chemical resistance of polycarbonate and nylon bowl

Type	Chemical name	Application examples	Material	
			Polycarbonate	Nylon
Acid	Hydrochloric acid Sulfuric acid Phosphoric acid Chromic acid	Acid washing liquid for metals	△	×
Alkaline	Sodium hydroxide (Caustic soda) Potash Calcium hydroxide (Slack lime) Ammonia water Carbotane of soda	Degreasing of metals Industrial salts Water-soluble cutting oil	×	○
Inorganic salts	Sodium sulfide Potassium nitrate Sulfate of soda	-	×	△
Chlorine solvents	Carbon tetrachloride Chloroform Ethylene chloride Methylene chloride	Cleaning liquid for metals Printing ink Dilution	×	△
Aromatic series	Benzene Toluene Paint thinner	Coatings Dry cleaning	×	△
Ketone	Acetone Methyl ethyl ketone Cyclohexane	Photographic film Dry cleaning Textile industries	×	×
Alcohol	Ethyl alcohol IPA Methyl alcohol	Antifreeze Adhesives	△	×
Oil	Gasoline Kerosene	-	×	○
Ester	Phthalic acid dimethyl Phthalic acid diethyl Acetic acid	Synthetic oil Anti-rust additives	×	○
Ether	Methyl ether Ethyl ether	Brake oil additives	×	○
Amino	Methyl amino	Cutting oil Brake oil additives Rubber accelerator	×	×
Others	Thread-lock fluid Sea water Leak tester	-	×	△
○: Essentially safe. △: Some effects may occur. ×: Effects will occur.				

Note1) When the above factors are present or there is some doubt, use a metal bowl for safety.

Note2) The display window of the element service indicator of semi standard products is made of nylon.

(3) Avoid the application where charge and discharge of pressure to/from a standard bowl is switched frequently. This may damage the bowl. A metal bowl is recommended in these cases.

(4) Shield from ultra violet light and radiation with protective cover.

⚠ **Caution**

(1) AD27-D with auto drain may have leakage of accumulated drain during pressure exhaust (this leakage is allowed in their constructions and not considered failure). Be sure to connect piping for drain.

Selection

⚠ **Warning**

(1) Grease used on the internal sliding parts and seals may flow to the outlet side.

(2) N.O. type auto drain should be operated under the following conditions to avoid malfunction. Operating compressor: 0.75 kW or more, Discharged flow rate: 100 L/min (ANR) or more
When using 2 or more auto drains, multiply the value above by the number of auto drains to find the capacity of the compressors you will need. For example, when using 2 auto drains, 1.5 kW (200 L/min (ANR)) of the compressor capacity is required. The operating pressure should be 0.1 MPa or more.

(3) N.C. type auto drain should be operated under the following conditions to avoid malfunction. Operating pressure for AD27: 0.1 MPa or more, for AD37 and AD47: 0.15 MPa or more.

Installation

⚠ **Warning**

(1) Do not drop or apply impact during transportation or installation. It will cause damage to the product and result in operation failure.

(2) Do not install in areas of high humidity or high temperature. Operation outside of the product specification range may cause damage to the product or operation failure, or shorten the product life.

(3) Connect the product ensuring the direction of "1"(IN) and "2"(OUT) for air direction and indicated arrow. Incorrect connections may cause malfunction.

(4) Install with adequate space for maintenance beneath the product. Refer to the section [12. Dimensions] (P30) for necessary space.

(5) Install vertically so that outlet of drain is downward. It cannot be used in horizontal or upward direction as it may cause operation failure.

Piping

⚠ **Warning**

(1) Before piping is connected, it should be thoroughly blown out with air (flushing) or washed to remove chips, cutting oil and solid foreign material from inside the pipe. Contamination of piping may cause damage or malfunction.

(2) When screwing together pipes and fittings, etc., be certain that chips from the pipe threads and sealant do not get inside the pipe. When a sealant tape is used, leave 1 thread ridges exposed at the end of the threads.

(3) Connect piping/fittings using the recommended torque while holding the female thread side tightly. Insufficient tightening torque leads to cause of loosening or sealing failure, and excessive tightening torque leads to cause of breakage of screws. Tightening without holding female thread applies an excessive force to the bracket directly, leading to breakage.

Recommended tightening torque Unit: N m

Thread size	1/8	1/4	3/8	1/2	3/4	1
Torque	3 to 5	8 to 12	15 to 20	20 to 25	28 to 30	36 to 38

(4) Before using an SMC fitting and S coupler, please refer to "Tightening the threaded portion of the connection thread" of the Fittings & Tubing Precautions.

(5) Do not apply torsion or bending moment other than the weight of the product itself. External piping needs to be supported separately as it may cause breakage. Non-flexible piping like steel tube is susceptible to excessive moment load or vibration. Insert flexible tubes to prevent this.

(6) Drain guide is not equipped with valve function. Be sure to connect piping for drain. No piping for drain allows the drain and compressed air to exhaust freely. Also, the piping installation should be performed with drain guide held by spanner to prevent breakage of bowl.

(7) The piping for drain from auto drain should be connected under the following requirements to avoid operating failure.
Tubing for AD27-D: I.D. ø2.5 (ø3/32") or larger, Length 5 m (200 inch) or shorter
Tubing for AD37, 47(N)-D: I.D. ø4 (ø3/16") or larger, Length 5 m (200 inch) or shorter
Tubing for AD38, 48(N)-D: I.D. ø6.5 (ø1/4") or larger, Length 5 m (200 inch) or shorter

Air Source

⚠ **Warning**

(1) Use clean air. Do not use compressed air containing chemicals, organic solvent, synthetic oil or corrosive gas as it may be cause of breakage of components or operation failure.

(2) Air containing too much moisture may cause malfunction. Install an air drier or aftercooler before the air filter.

Handling Precautions

⚠ **Warning**

(1) Element service indicator (semi-standard: L) is used to check the differential pressure between IN and OUT ports. When the differential pressure exceeds 0.025 MPa, the element service indicator may start even when the element is in initial state.

(2) When adjusting the flow rate of the product with an element service indicator, adjust the flow rate from minimum to maximum. When the flow rate exceeds the maximum value, readjust the flow rate from zero.

(3) As the element goes through its service life and begins to clog, the red part of the element service indicator appears. Ensure that the element is replaced before the red indication reaches the upper level.

Maintenance

⚠ **Warning**

(1) Release the pressure in the product to the atmosphere when replacing parts or removing piping.

(2) Maintenance and checks should be done by following the procedure in this operation manual. Incorrect handling of the product may cause breakage or operation failure of the equipment or device.

(3) Perform periodical check to find cracks, flaws or other deterioration on resin bowl.
If any of these appear, replace with a new or metal bowl. Otherwise, breakage may occur. Investigate and/or review the operating conditions if necessary.

(4) Check for dirt in resin bowl periodically. If any dirt is seen, replace with new bowl. If removing dirt by washing the resin bowl, never use washing material other than neutral detergent. Otherwise, the bowl is damaged.

(5) Open and close the drain cock manually. The use of tools can result in damage to the product.

(6) Replace the element every 2 years or when the pressure drop at the output pressure from initial operation becomes 0.1 MPa, whichever comes first, to prevent damage to the element.

(7) Discharge drain in the bowl before it reaches the element assembly. Refer to the section [8. Operation and Adjustment] (P20-21) for discharging of drain.

⚠ **Caution**

(1) Check the element periodically and replace it with a new one if necessary. If it is found that outlet pressure drops lower than the normal condition or the flow is restricted during operation, check the condition of the element.

(2) For the N.C. type auto drain, when there is no pressure, drain which does not operate the auto drain mechanism will remain in the bowl. It is recommended to release the residual drain manually at the end of the working day.

2. Application

This product aims at eliminating excess saturated water and solid foreign matter in the air line.

3. Standard Specifications

Model		AF20-D	AF30-D	AF40-D	AF40-06-D	AF50-D	AF60-D
Port size		1/8, 1/4	1/4, 3/8	1/4, 3/8, 1/2	3/4	3/4, 1	1
Fluid		Air					
Ambient and fluid temperature		-5 to 60 ° C (with no freezing)					
Proof pressure		1.5 MPa					
Max. operating pressure		1.0 MPa					
Min. operating pressure of auto drain	N.C.	0.1 MPa	0.15 MPa				
	N.O.	–	0.1 MPa				
Filtration rating		5μm					
Compressed air quality class Note 1)		ISO8573-1:2010 [6:8:4]					
Drain capacity		8 cm^3	25 cm^3	45 cm^3			
Bowl material		Polycarbonate					
Bowl guard		Semi-standard (Steel	Standard (Polycarbonate)				
Weight		0.09 kg	0.17 kg	0.35 kg	0.39 kg	0.85 kg	0.92 kg

Note 1) Based on ISO8573-1:2010 Compressed air - Part1: Contaminants and purity classes.
The compressed air quality class on the inlet side is [7:9:4].

4. How to Order

AF [30] - [ ] [03] [B] - [ ] - D

❶ ❷ ❸ ❹ ❺

				Symbol	Description	❶ Body size 20	30	40	50	60
❷	Thread type			Nil	Rc	●	●	●	●	●
				N	NPT	●	●	●	●	●
				F	G	●	●	●	●	●
❸	Port size			01	1/8	●	-	-	-	-
				02	1/4	●	●	●	-	-
				03	3/8	-	●	●	-	-
				04	1/2	-	-	●	-	-
				06	3/4	-	-	●	●	-
				10	1	-	-	-	●	●
❹	Option	a	Mounting	Nil	Without mounting option	●	●	●	●	●
				B	With bracket	●	●	●	●	●
		b	Float type auto drain	Nil	Without auto drain	●	●	●	●	●
				C	N.C. (Normally closed) Drain port is closed when pressure is not supplied.	●	●	●	●	●
				D	N.O. (Normally opened) Drain port is opened when pressure is not supplied.	-	●	●	●	●
❺	Semi-standard	c	Bowl	Nil	Polycarbonate bowl	●	●	●	●	●
				2	Metal bowl	●	●	●	●	●
				6	Nylon bowl	●	●	●	●	●
				8	Metal bowl with level gauge	-	●	●	●	●
				C	With bowl guard	●	-	-	-	-
				6C	With bowl guard (Nylon bowl)	●	-	-	-	-
		d	Indicator	Nil	Without indicator	●	●	●	●	●
				L	With element service indicator	●	●	● Note3)	●	●
		e	Drain port	Nil	With drain cock	●	●	●	●	●
				J	Drain guide 1/8	●	-	-	-	-
					Drain guide 1/4	-	●	●	●	●
				W	Drain cock with barb fitting	-	●	●	●	●
		f	Flow direction	Nil	Flow direction: Left to right	●	●	●	●	●
				R	Flow direction: Right to left	●	●	●	●	●
		g	Pressure unit Temp. unit	Nil	Pressure unit: MPa Temp. unit: °C	●	●	●	●	●
				Z	Pressure unit: psi Temp. unit: °F	○ Note 2)	○ Note 2)	○ Note 2)	○ Note 2)	○ Note 2)

Note 1) ❹Option and ❺Semi-standard: Select one each for a to g.
Note 2) ○: For NPT thread type only.
Note 3) Port size “06” is not applicable.

5. Structural Drawing, Option and Replacement Parts

Structural drawing / Option / Replacement parts

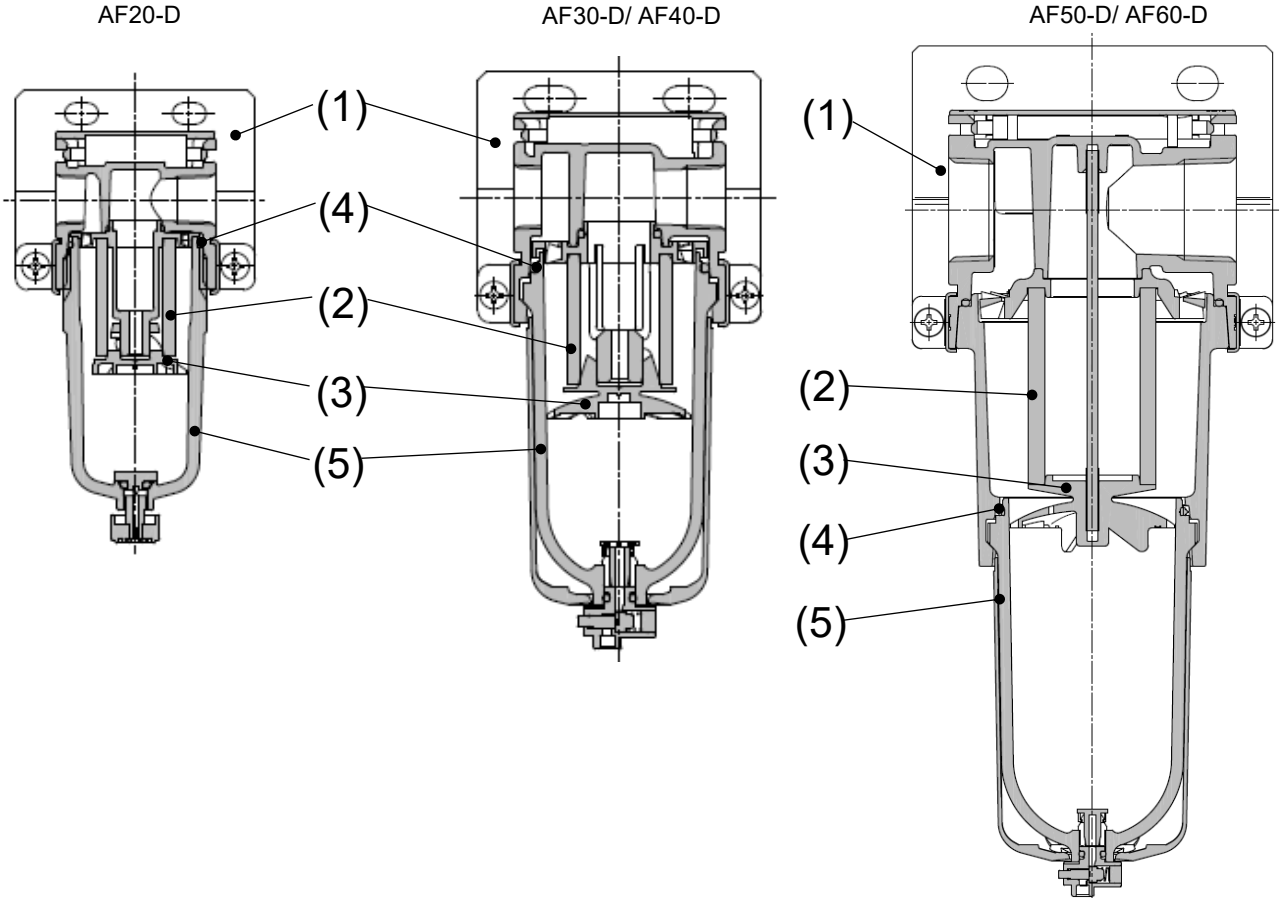

Option

No.	Part name	Part No.					
		AF20-D	AF30-D	AF40-D	AF40-06-D	AF50-D	AF60-D
(1)	Bracket assembly Note 2)	AF24P-070AS	AF34P-070AS	AF44P-070AS	AF49P-070AS	AF54P-070AS	

Note 1) The number in the table and structural drawing is consistent with the number in [10. How to Replace the Components] (P23-28) and [11. Disassembly Drawing] (P29).

Note 2) Assembly of 2 types of bracket and 2 set screws.

Replacement Parts

No.	Part name	Part No.					
		AF20-D	AF30-D	AF40-D	AF40-06-D	AF50-D	AF60-D
(2)	Element	AF20P-060S	AF30P-060S	AF40P-060S		AF50P-060S	AF60P-060S
(3)	Baffle	AF24P-040S	AF34P-040S	AF44P-040S		AF54P-040S	AF64P-040S
(4)	Bowl seal	C2SFP-260S	C32FP-260S	C42FP-260S			
(5)	Bowl assembly	Refer to the section [6. Bowl Assembly Specifications] (P11-P18).					
	Auto drain (N.C.)						
	Auto drain (N.O.)						

Note 1) The numbers in the table and structural drawing are consistent with the numbers in [10. How to Replace the Components] (P23-28) and [11. Disassembly Drawing] (P29).

6. Bowl Assembly Specifications

6-1. Bowl assembly / auto drain for AF20-D

Option symbol	—		—	
Semi-standard symbol	—	6	C	6C
Appearance and part No.				

Semi-standard: — (Standard)

Piping port thread type	(5) Part No.
Rc	C2SF-D
G	
NPT	C2SF(-Z)-D

Semi-standard: 6

Piping port thread type	(5) Part No.
Rc	C2SF-6-A
G	
NPT	C2SF-6(Z)-A

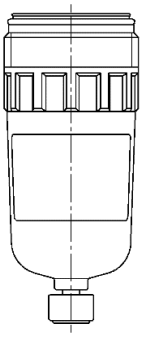

Semi-standard: C

Piping port thread type	(5) Part No.
Rc	C2SF-C-D
G	
NPT	C2SF-C(Z)-D

Semi-standard: 6C

Piping port thread type	(5) Part No.
Rc	C2SF-6C-A
G	
NPT	C2SF-6C(Z)-A

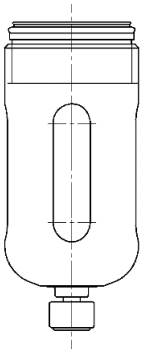

Option symbol	—		—	
Semi-standard symbol	J	6J	CJ	6CJ
Appearance and part No.				

Semi-standard: J

Piping port thread type	(5) Part No.
Rc	C2SF-J-D
G	C2SFF-J-D
NPT	C2SFN-J(Z)-D

Semi-standard: 6J

Piping port thread type	(5) Part No.
Rc	C2SF-6J-A
G	C2SFF-6J-A
NPT	C2SFN-6J(Z)-A

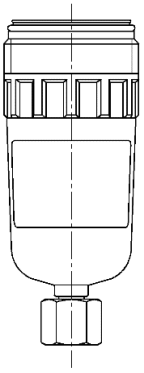

Semi-standard: CJ

Piping port thread type	(5) Part No.
Rc	C2SF-CJ-D
G	C2SFF-CJ-D
NPT	C2SFN-CJ(Z)-D

Semi-standard: 6CJ

Piping port thread type	(5) Part No.
Rc	C2SF-6CJ-A
G	C2SFF-6CJ-A
NPT	C2SFN-6CJ(Z)-A

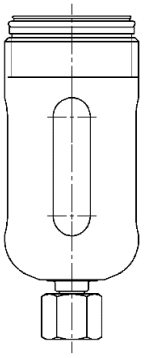

Option symbol	—	—
Semi-standard symbol	2	2J
Appearance and part No.		

Semi-standard: 2

Piping port thread type	(5) Part No.
Rc	C2SF-2-A
G	
NPT	C2SF-2(Z)-A

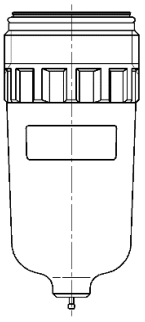

Semi-standard: 2J

Piping port thread type	(5) Part No.
Rc	C2SF-2J-A
G	C2SFF-2J-A
NPT	C2SFN-2J(Z)-A

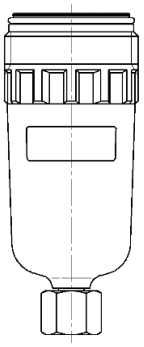

Option symbol	C Note 1)		C Note 1)	
Semi-standard symbol	—	6	C	6C
Appearance and part No.	Semi-standard: — Piping port thread type / (5) Part No. Rc / G: AD27-D NPT: AD27(-Z)-D Semi-standard: 6 Piping port thread type / (5) Part No. Rc / G: AD27-6-A NPT: AD27-6(Z)-A 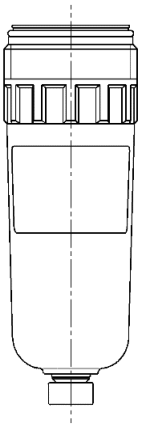		Semi-standard: C Piping port thread type / (5) Part No. Rc / G: AD27-C-D NPT: AD27-C(Z)-D Semi-standard: 6C Piping port thread type / (5) Part No. Rc / G: AD27-6C-A NPT: AD27-6C(Z)-A 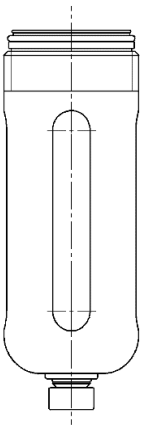	

Option symbol	C Note 1)
Semi-standard symbol	2
Appearance and part No.	Semi-standard: 2 Piping port thread type / (5) Part No. Rc / G: AD27-2-A NPT: AD27-2(Z)-A 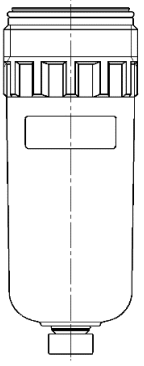

Note 1) Minimum operating pressure is 0.1 MPa.

Note 2) Part No. (5) includes Bowl seal (4). Refer to the section [11. Disassembly Drawing] (P29).

Note 3) "Z" in Part No. (5) indicates standard specifications. The pressure unit: psi. The temperature unit: °F.

Note 4) Refer to the section [4. How to Order] (P9) for option and semi-standard symbols.

6-2. Bowl assembly / auto drain for AF30-D

Option symbol	—		—	
Semi-standard symbol	—	6	J	6J

Appearance and part No.

Semi-standard: — (Standard)

Piping port thread type	(5) Part No.
Rc	C3SF-D
G	
NPT	C3SF(-Z)-D

Semi-standard: 6

Piping port thread type	(5) Part No.
Rc	C3SF-6-D
G	
NPT	C3SF-6(Z)-D

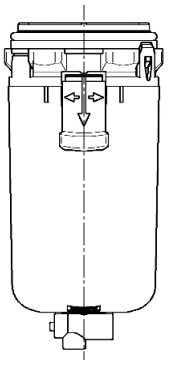

Semi-standard: J

Piping port thread type	(5) Part No.
Rc	C3SF-J-D
G	C3SFF-J-D
NPT	C3SFN-J(Z)-D

Semi-standard: 6J

Piping port thread type	(5) Part No.
Rc	C3SF-6J-D
G	C3SFF-6J-D
NPT	C3SFN-6J(Z)-D

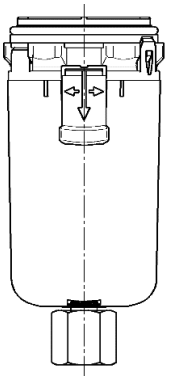

Option symbol	—	
Semi-standard symbol	W	6W

Appearance and part No.

Semi-standard: W

Piping port thread type	(5) Part No.
Rc	C3SF-W-D
G	
NPT	C3SF-W(Z)-D

Semi-standard: 6W

Piping port thread type	(5) Part No.
Rc	C3SF-6W-D
G	
NPT	C3SF-6W(Z)-D

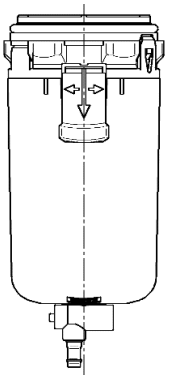

Option symbol	—	—
Semi-standard symbol	2	2J

Appearance and part No.

Semi-standard: 2

Piping port thread type	(5) Part No.
Rc	C3SF-2-A
G	
NPT	C3SF-2(Z)-A

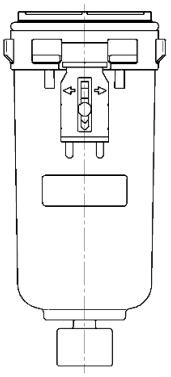

Semi-standard: 2J

Piping port thread type	(5) Part No.
Rc	C3SF-2J-A
G	C3SFF-2J-A
NPT	C3SFN-2J(Z)-A

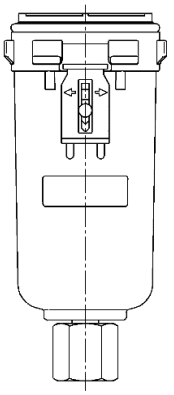

Option symbol	—	—
Semi-standard symbol	**8**	**8J**
Appearance and part No.	Semi-standard: 8 Piping port thread type / (5) Part No. Rc, G: C3LF-8-A NPT: C3LF-8(Z)-A 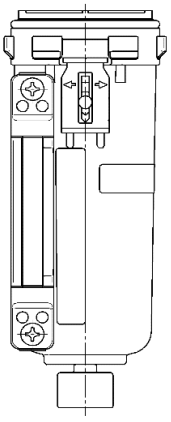	Semi-standard: 8J Piping port thread type / (5) Part No. Rc: C3LF-8J-A G: C3LFF-8J-A NPT: C3LFN-8J(Z)-A 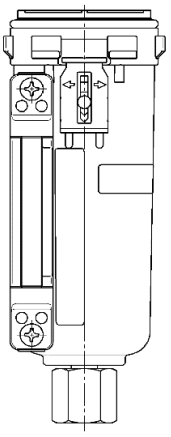

Option symbol	C Note 1)		C Note 1)
Semi-standard symbol	—	**6**	**2**
Appearance and part No.	Semi-standard: — Piping port thread type / (5) Part No. Rc, G: AD37-D NPT: AD37N(-Z)-D Semi-standard: 6 Piping port thread type / (5) Part No. Rc, G: AD37-6-D NPT: AD37N-6(Z)-D 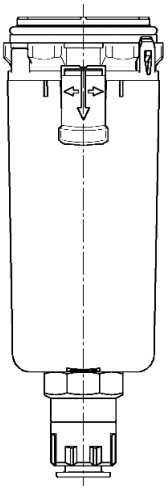		Semi-standard: 2 Piping port thread type / (5) Part No. Rc, G: AD37-2-A NPT: AD37N-2(Z)-A 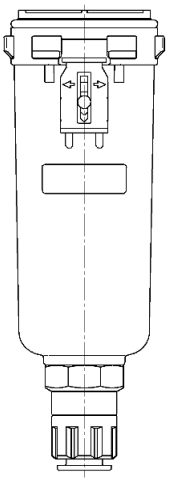

Option symbol	C Note 1)
Semi-standard symbol	**8**
Appearance and part No.	Semi-standard: 8 Piping port thread type / (5) Part No. Rc, G: AD37-8-A NPT: AD37N-8(Z)-A 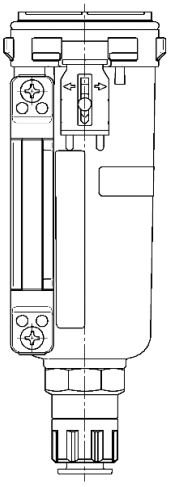

Note 1) Minimum operating pressure is 0.15 MPa.
Note 2) Part No. (5) includes Bowl seal (4). Refer to the section [11. Disassembly Drawing] (P29).
Note 3) "Z" in Part No. (5) indicates standard specifications. The pressure unit: psi. The temperature unit: °F.
Note 4) Refer to the section [4. How to Order] (P9) for option and semi-standard symbols.

Option symbol	D Note 1)		D Note 1)
Semi-standard symbol	—	6	2
Appearance and part No.	Semi-standard: — Piping port thread type / (5) Part No. Rc / G: AD38-D NPT: AD38N(-Z)-D Semi-standard: 6 Piping port thread type / (5) Part No. Rc / G: AD38-6-D NPT: AD38N-6(Z)-D 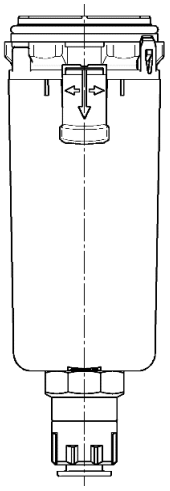		Semi-standard: 2 Piping port thread type / (5) Part No. Rc / G: AD38-2-A NPT: AD38N-2(Z)-A 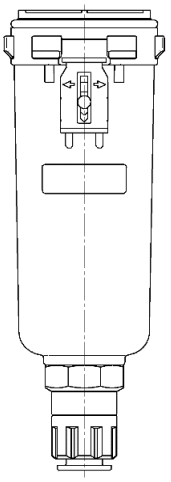

Option symbol	D Note 1)
Semi-standard symbol	8
Appearance and part No.	Semi-standard: 8 Piping port thread type / (5) Part No. Rc / G: AD38-8-A NPT: AD38N-8(Z)-A 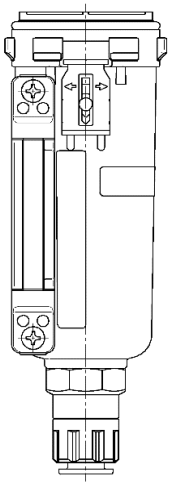

Note 1) Minimum operating pressure is 0.1 MPa.

Note 2) Part No. (5) includes Bowl seal (4). Refer to the section [11. Disassembly Drawing] (P29).

Note 3) "Z" in Part No. (5) indicates standard specifications. The pressure unit: psi. The temperature unit: °F.

Note 4) Refer to the section [4. How to Order] (P9) for option and semi-standard symbols.

6-3. Bowl assembly / auto drain for AF40, 50, 60-D

Option symbol	—		—	
Semi-standard symbol	—	6	J	6J

Appearance and part No.

Semi-standard: — (Standard)

Piping port thread type	(5) Part No.
Rc	C4SF-D
G	
NPT	C4SF(-Z)-D

Semi-standard: 6

Piping port thread type	(5) Part No.
Rc	C4SF-6-D
G	
NPT	C4SF-6(Z)-D

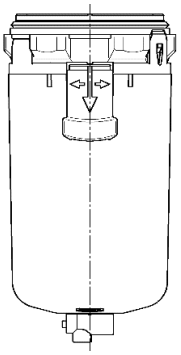

Semi-standard: J

Piping port thread type	(5) Part No.
Rc	C4SF-J-D
G	C4SFF-J-D
NPT	C4SFN-J(Z)-D

Semi-standard: 6J

Piping port thread type	(5) Part No.
Rc	C4SF-6J-D
G	C4SFF-6J-D
NPT	C4SFN-6J(Z)-D

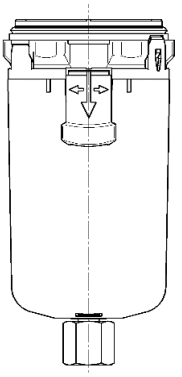

Option symbol	—	
Semi-standard symbol	W	6W

Appearance and part No.

Semi-standard: W

Piping port thread type	(5) Part No.
Rc	C4SF-W-D
G	
NPT	C4SF-W(Z)-D

Semi-standard: 6W

Piping port thread type	(5) Part No.
Rc	C4SF-6W-D
G	
NPT	C4SF-6W(Z)-D

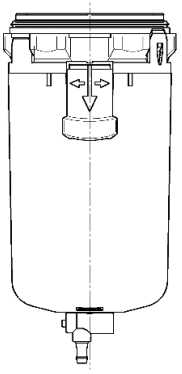

Option symbol	—	—
Semi-standard symbol	2	2J

Appearance and part No.

Semi-standard: 2

Piping port thread type	(5) Part No.
Rc	C4SF-2-A
G	
NPT	C4SF-2(Z)-A

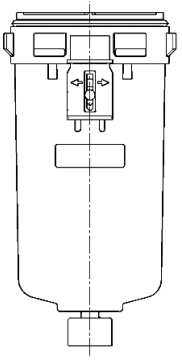

Semi-standard: 2J

Piping port thread type	(5) Part No.
Rc	C4SF-2J-A
G	C4SFF-2J-A
NPT	C4SFN-2J(Z)-A

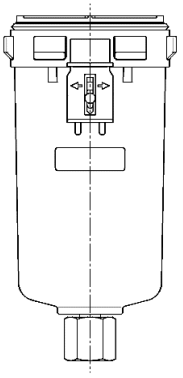

Option symbol	—	—
Semi-standard symbol	**8**	**8J**
Appearance and part No.	Semi-standard: 8 Piping port thread type / (5) Part No. Rc / G: C4LF-8-A NPT: C4LF-8(Z)-A 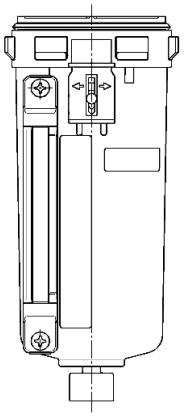	Semi-standard: 8J Piping port thread type / (5) Part No. Rc: C4LF-8J-A G: C4LFF-8J-A NPT: C4LFN-8J(Z)-A 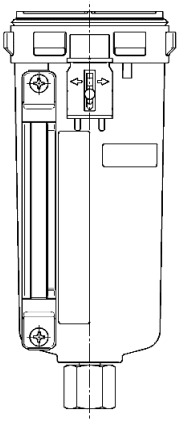

Option symbol	C Note 1)		C Note 1)
Semi-standard symbol	—	**6**	**2**
Appearance and part No.	Semi-standard: — Piping port thread type / (5) Part No. Rc / G: AD47-D NPT: AD47N(-Z)-D Semi-standard: 6 Piping port thread type / (5) Part No. Rc / G: AD47-6-D NPT: AD47N-6(Z)-D 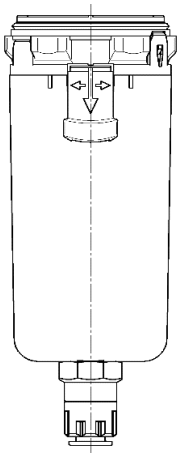		Semi-standard: 2 Piping port thread type / (5) Part No. Rc / G: AD47-2-A NPT: AD47N-2(Z)-A 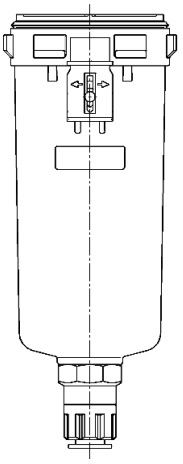

Option symbol	C Note 1)
Semi-standard symbol	**8**
Appearance and part No.	Semi-standard: 8 Piping port thread type / (5) Part No. Rc / G: AD47-8-A NPT: AD47N-8(Z)-A 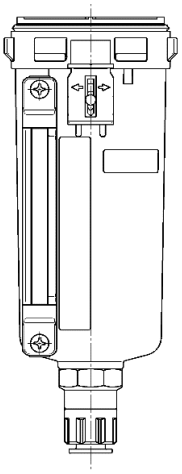

Note 1) Minimum operating pressure is 0.15 MPa.
Note 2) Part No. (5) includes Bowl seal (4). Refer to the section [11. Disassembly Drawing] (P29).
Note 3) "Z" in Part No. (5) indicates standard specifications. The pressure unit: psi. The temperature unit: °F.
Note 4) Refer to the section [4. How to Order] (P9) for option and semi-standard symbols.

Option symbol	D Note 1)		D Note 1)
Semi-standard symbol	—	6	2
Appearance and part No.	Semi-standard: — Piping port thread type / (5) Part No. Rc, G: AD48-D NPT: AD48N(-Z)-D Semi-standard: 6 Piping port thread type / (5) Part No. Rc, G: AD48-6-D NPT: AD48N-6(Z)-D 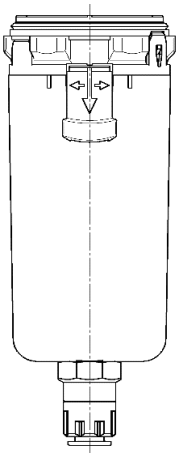		Semi-standard: 2 Piping port thread type / (5) Part No. Rc, G: AD48-2-A NPT: AD48N-2(Z)-A 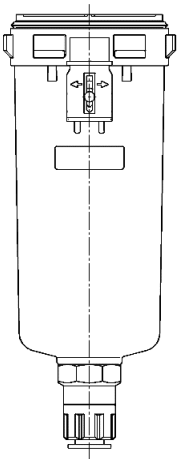

Option symbol	D Note 1)
Semi-standard symbol	8
Appearance and part No.	Semi-standard: 8 Piping port thread type / (5) Part No. Rc, G: AD48-8-A NPT: AD48N-8(Z)-A 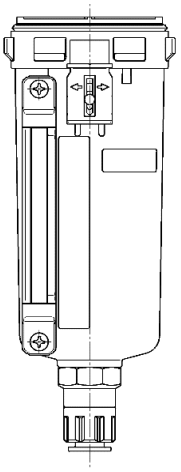

Note 1) Minimum operating pressure is 0.1 MPa.

Note 2) Part No. (5) includes Bowl seal (4). Refer to the section [11. Disassembly Drawing] (P29).

Note 3) "Z" in Part No. (5) indicates standard specifications. The pressure unit: psi. The temperature unit: °F.

Note 4) Refer to the section [4. How to Order] (P9) for option and semi-standard symbols.

7. Assembly of Optional Parts

Bracket

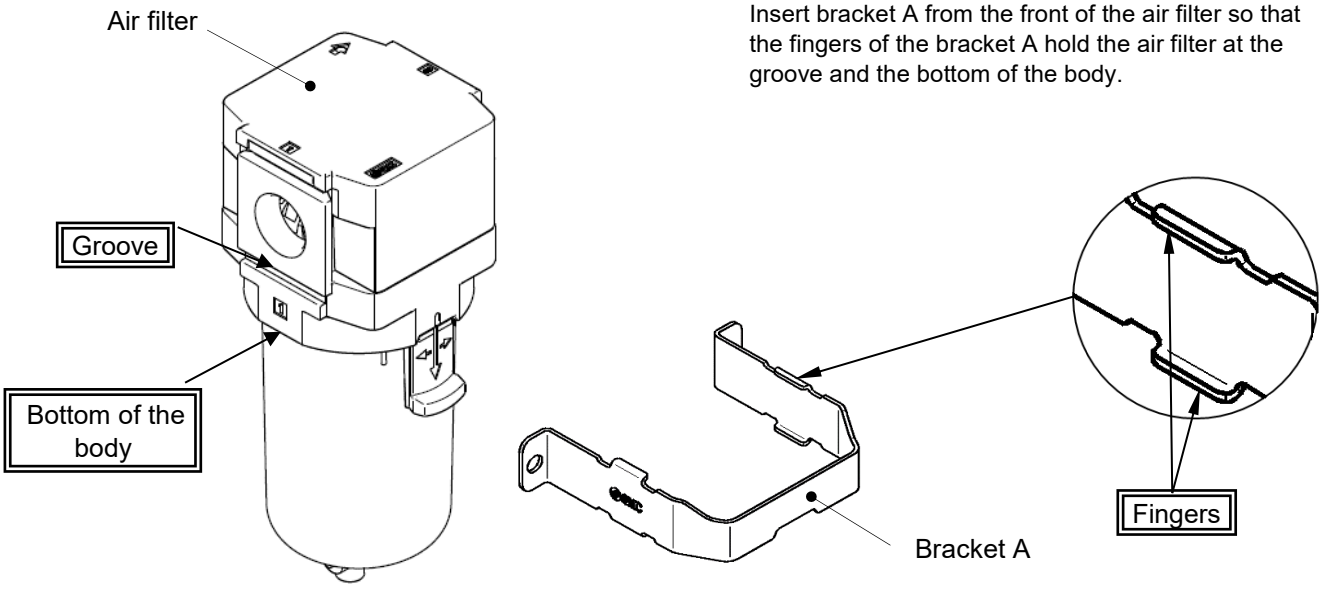

1) Mounting of bracket A
Insert bracket A from the front of the air filter so that the fingers of the bracket A hold the air filter at the groove and the bottom of the body.

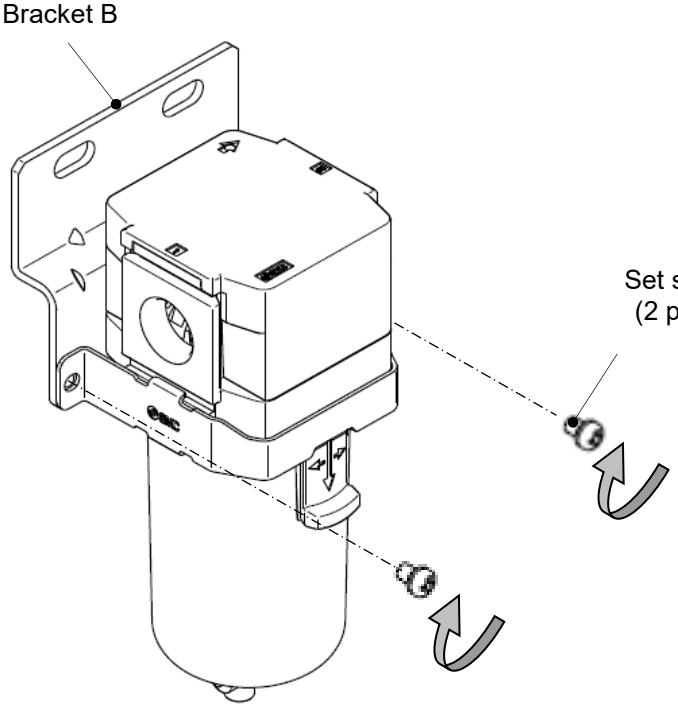

2) Mounting of bracket B
Fix the bracket B with the set screw (2 pcs.) included in the package. Refer to the table below for the tightening torque.

Model	Tool	Tightening torque
AF20-D	Phillips screwdriver	0.75+/-0.2 N m
AF30-D		
AF40-D		
AF50-D		1.5+/-0.2 N m
AF60-D		

8. Operation and Adjustment

8-1. Discharge from the product with drain cock

- Pressurize the inside of the air filter when discharging drain. Drain will not be discharged properly if not pressurized.
- Drain discharge mechanism is different depending on the bowl assembly. Check the bowl assembly and discharge the drain following the method below.
  Rotation type: After discharging the drain, tighten the drain cock to the opposite direction by hand until the seal inside seals correctly. Use of a tool can damage the product.

AF20-D: Drain cock (rotation type)
(Polycarbonate bowl / Nylon bowl)

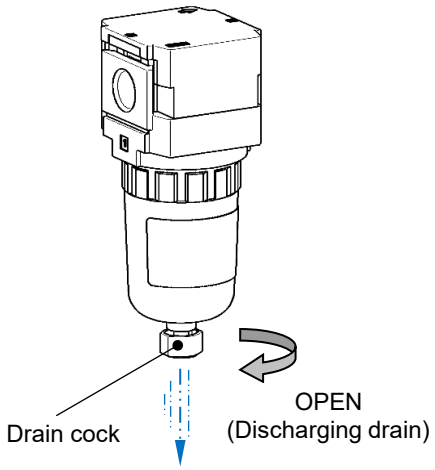

AF30-D / AF40-D/ AF50-D/ AF60-D: Drain cock / With barb fitting (push type)
(Polycarbonate bowl / Nylon bowl)

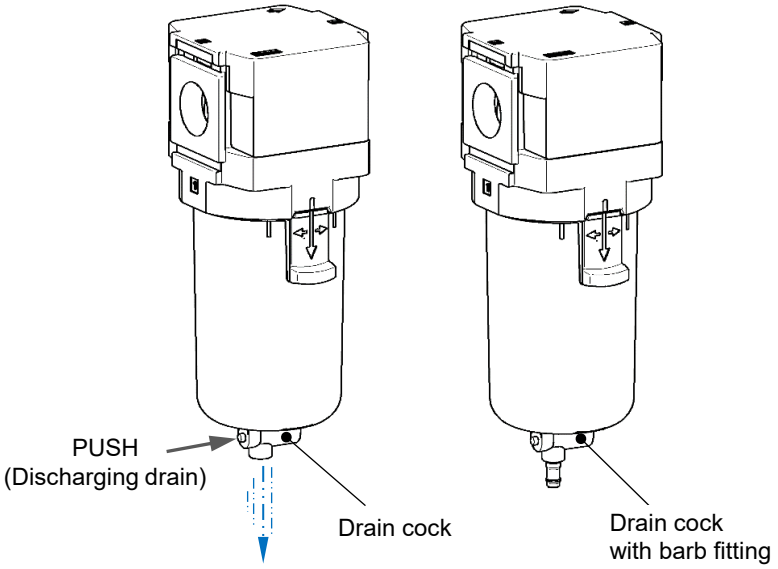

AF20-D: Drain cock (push type)
(Metal bowl)

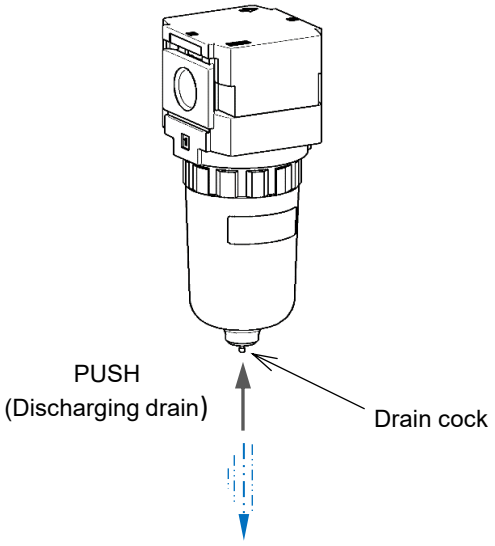

AF30-D / AF40-D/ AF50-D/ AF60-D: Drain cock (rotation type)
(Metal bowl / Metal bowl with level gauge)

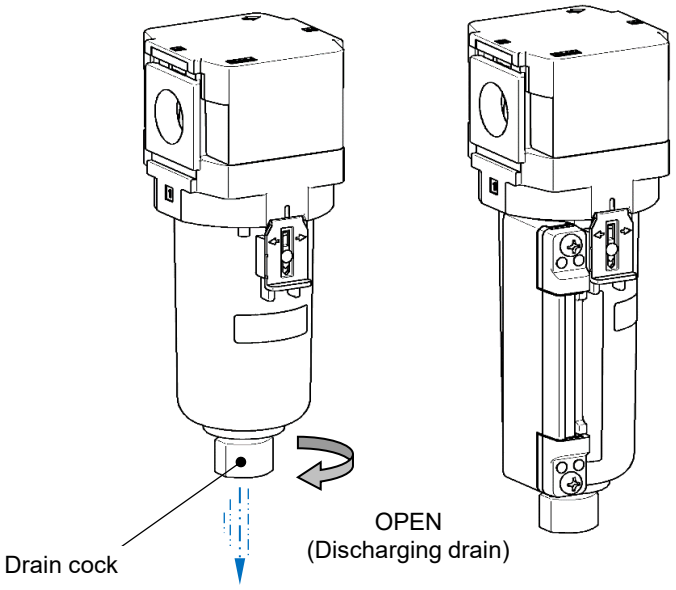

8-2. Manual drain discharge from the auto drain

- Pressurize the inside of the air filter when discharging drain. Drain will not be discharged properly if not pressurized.
- To discharge the auto drain manually, follow the procedure below. After discharging the drain, rotate the cock to the opposite direction by hand to close the drain valve. Use of a tool can damage the product.

AF20-D: Auto drain

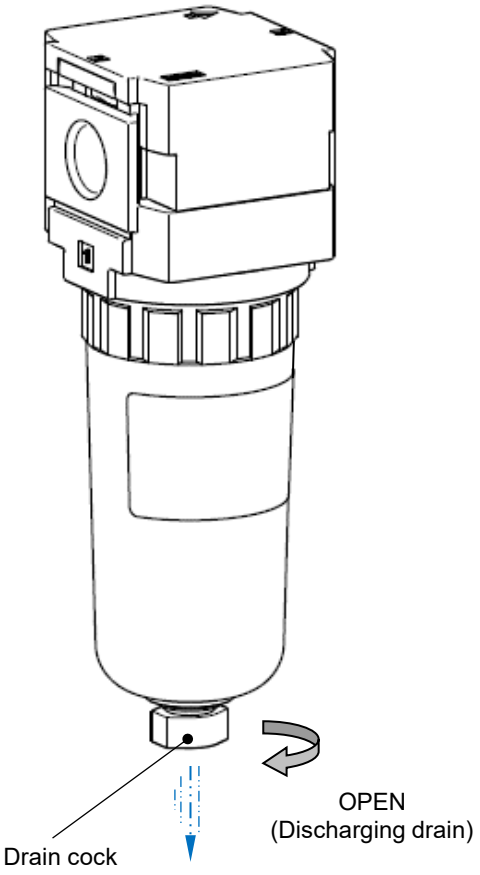

AF30-D/ AF40-D/ AF50-D/ AF60-D: Auto drain

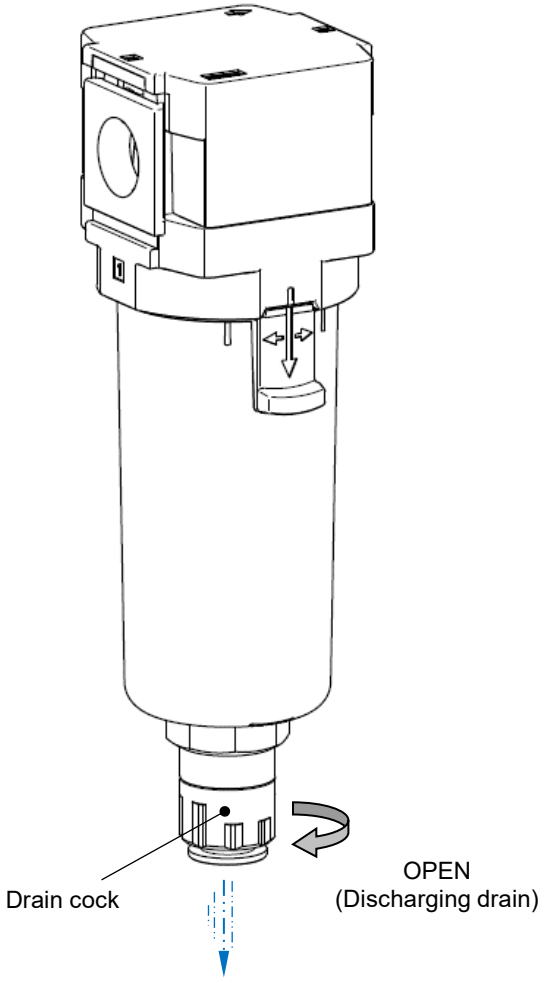

9. Trouble Shooting

Refer to the sections [8. Operation and Adjustment] (P20-P21), [10. How to Replace the Components] (P23-28) and [11. Disassembly Drawing] (P29).

Trouble		Possible cause	Countermeasure	Page for reference
Category	Failure			
Flow rate	As pressure drop is large, fluid does not flow.	1. Clog of the element.	Replace the element.	P23-28
Air leakage	Air leakage from between the body and the bowl.	1. The bowl seal is damaged.	Replace the bowl seal. Grease up before replacing the bowl seal. Note)	P23-25
	Air leakage from the bowl.	1. The bowl is damaged.	Replace the bowl assembly. (If the solvent is considered to be harmful, replacement to a metal bowl is recommended.)	P23-25
	Air leakage from the drain cock.	1. Foreign matter caught in the valve of the drain cock.	Open the drain cock for a few seconds for blowing.	P20-21
		2. Seating part of the drain cock is damaged.	Replace the bowl assembly.	P23-25
	Drain or air continues blowing out from the drain discharge of the float type auto drain.	1. Low supply pressure	Confirm the minimum operating pressure of the auto drain.	P8 P11-18
		2. The product is not mounted correctly.	Install the drain exhaust so that it will face vertically downward.	-
		3. Foreign matter is caught at the main valve of the auto drain.	Eliminate the dirt by manual discharge.	P21
		4. Main valve of the auto drain is broken.	Replace the bowl assembly.	P23-25
		5. Drain piping is long, or I.D. of the piping is small. (Back pressure is applied.)	Be sure to connect the appropriate piping for drain.	P6
		6. Drain discharging part and bowl seat are damaged.	Replace the bowl assembly.	P23-25
Operability	Drain is not discharging when the drain cock opens.	1. Blockage of outlet of the drain cock due to solid foreign matter etc.	Replace the bowl assembly.	P23-25
	Too much drain comes from the piping of outlet side.	1. Drain level reaches the baffle.	Open the drain cock for discharging and replace the element.	P20-21 P23-28

Note) Fluorine grease is recommended.

10. How to Replace the Components

⚠ Warning

Before replacement, make sure that no pressure remains in the product.

After replacement, confirm that the product satisfies specific functions and no external leakage occurs before operating it.

10-1. Bowl Assembly Replacement

Applicable model	Work category	Procedure	Tool	Criteria
AF20-D	Disassembly	1) Remove the bowl assembly from the product. If the bowl assembly is tightened too much to be removed, use a hook spanner until it can be loosened by hand.	Spanner specified for SMC Product No.: 1129129	-

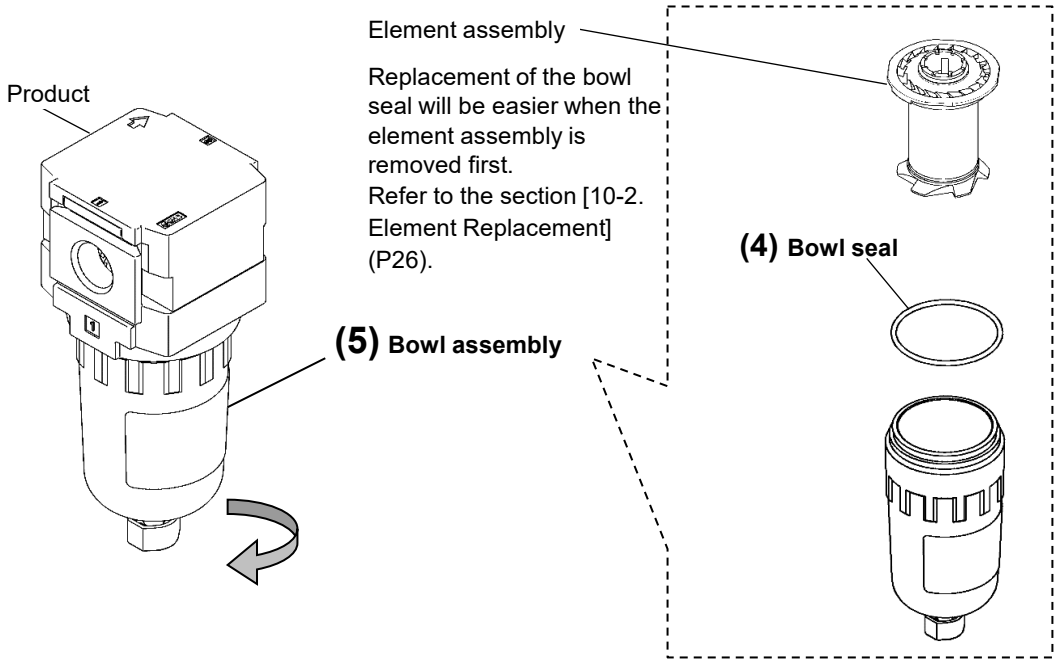

Work category	Procedure	Tool	Criteria
Assembly	1) Screw the bowl assembly into the product. Tighten it referring to the specified torque.	-	Reference tightening torque: 2.1 N m

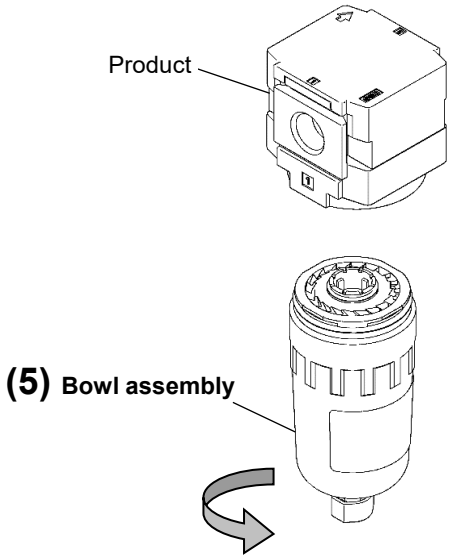

Applicable model	Work category	Procedure	Tool	Criteria
AF30-D AF40-D	Disassembly	1) Remove the bowl assembly from the product. While the lock button is held down, rotate the bowl assembly by approx. 30 degrees so that the mating marks of the body and bowl assembly meet each other. Then remove the bowl assembly by pulling it downward.	-	-

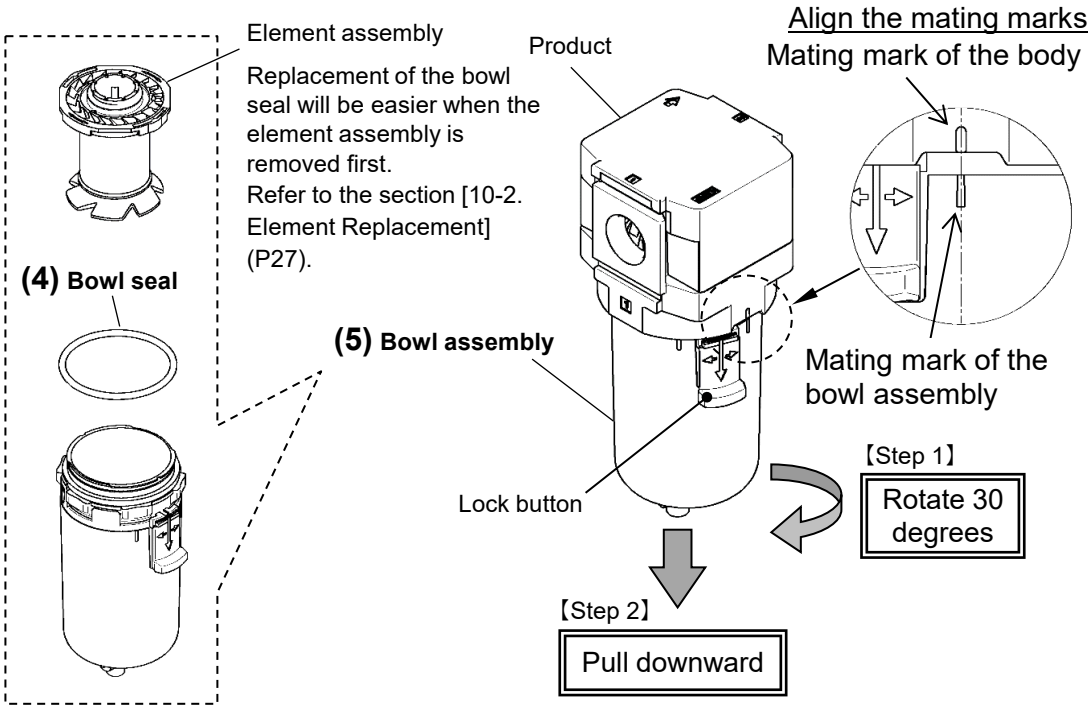

Work category	Procedure	Tool	Criteria
Assembly	1) Mount the bowl assembly to the product and rotate the bowl assembly until the lock button is locked in position as shown in the figure below.	-	-

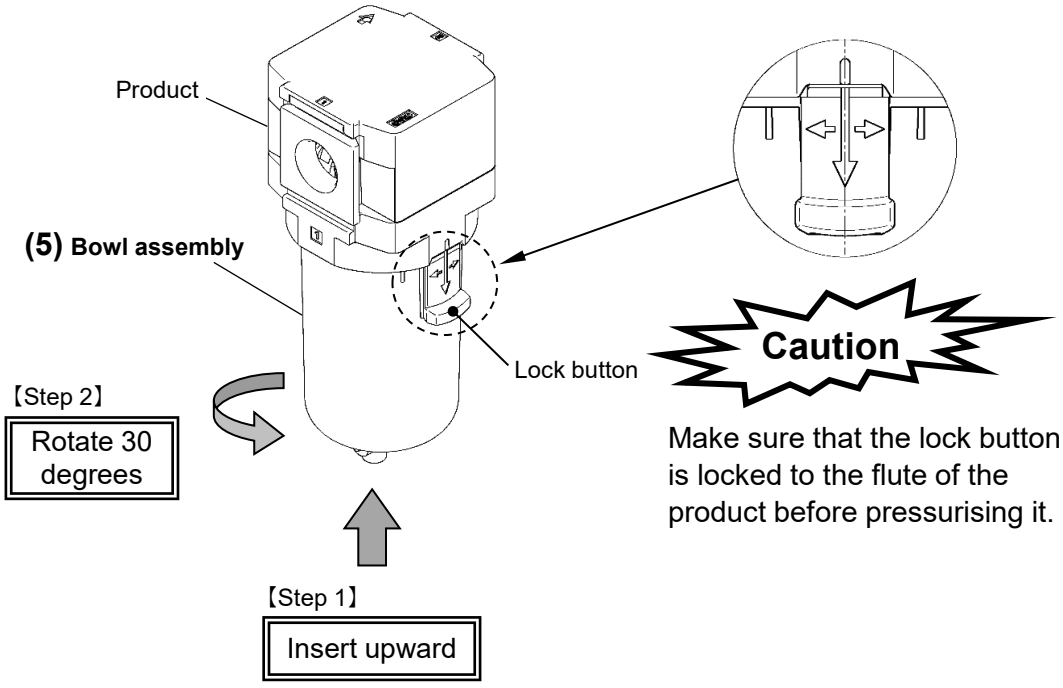

Applicable model	Work category	Procedure	Tool	Criteria
AF50-D AF60-D	Disassembly	1) Remove the bowl assembly from the product. While the lock button is held down, rotate the bowl assembly by approx. 30 degrees so that the mating marks of the body and bowl assembly meet each other. Then remove the bowl assembly by pulling it downward.	-	-

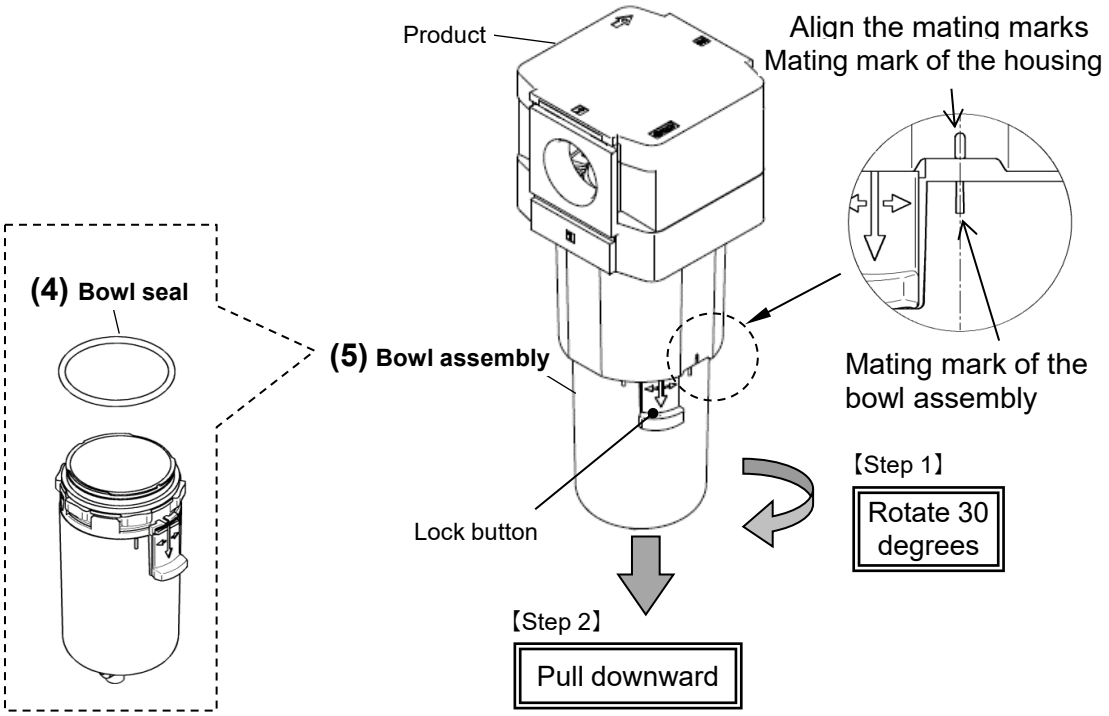

Work category	Procedure	Tool	Criteria
Assembly	1) Mount the bowl assembly to the product and rotate the bowl assembly until the lock button is locked in position as shown in the figure below.	-	-

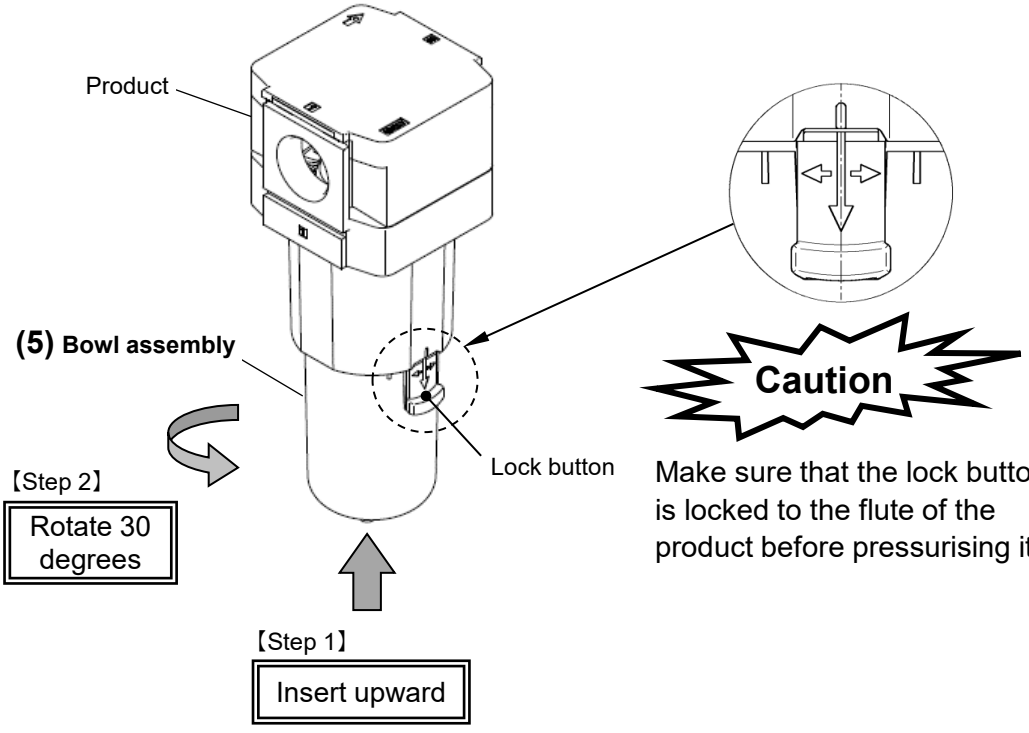

10-2. Element Replacement

Applicable model	Work category	Procedure	Tool	Criteria
AF20-D	Disassembly	1) First remove the bowl assembly referring to the section [10-1. Bowl Assembly Replacement] (P23), then remove the snap fits (2 pcs.) of the deflector and pull upward to remove the element assembly. Rotate the baffle in the arrow direction to remove the element from the element assembly.	–	–

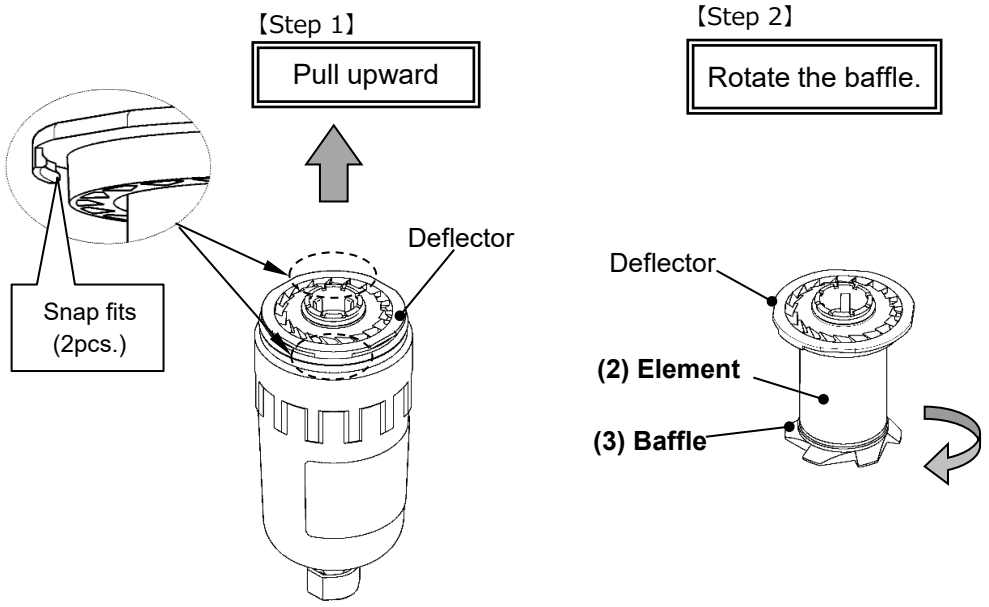

Work category	Procedure	Tool	Criteria
Assembly	1) Mount the element to the deflector and rotate the baffle in the arrow direction to mount the element to the baffle. Once the element and baffle are mounted, press the deflector downward until the snap fits (2 pcs.) are engaged with the bowl assembly. Mount the bowl assembly referring to section [10-1. Bowl Assembly Replacement] (P23).	–	–

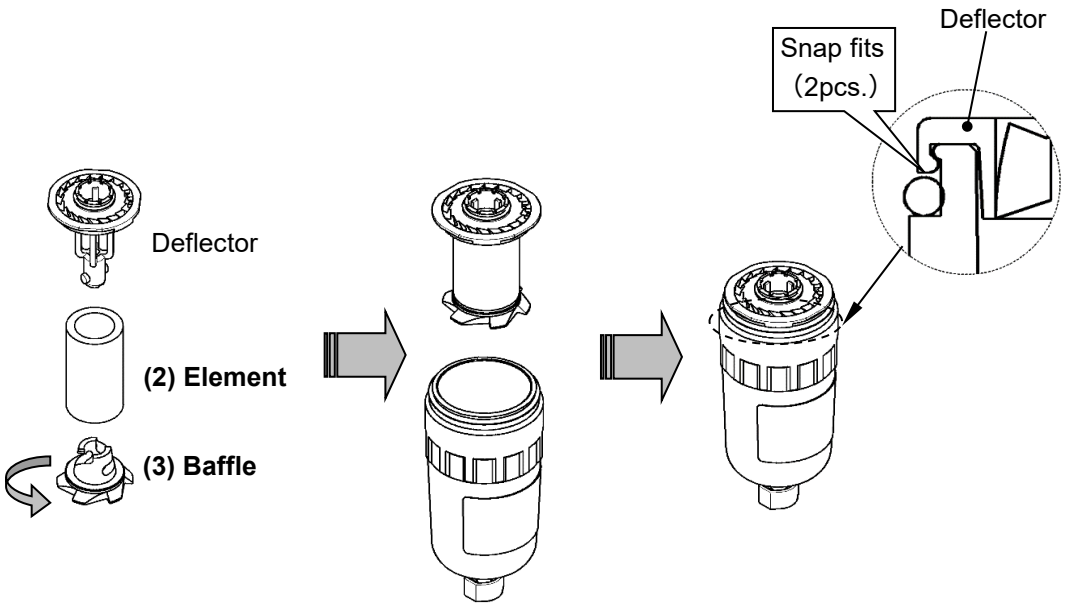

Applicable model	Work category	Procedure	Tool	Criteria
AF30-D AF40-D	Disassembly	1) Remove the bowl assembly referring to the section [10-1. Bowl Assembly Replacement] (P24). With the bowl assembly removed, rotate the deflector 90 degrees while holding the holding parts and remove the element assembly.	-	-

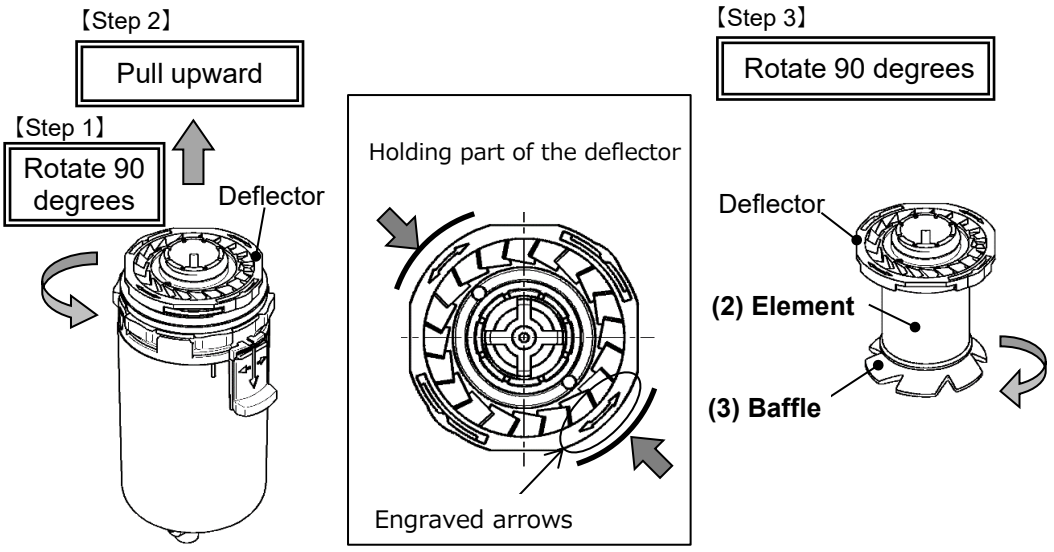

Work category	Procedure	Tool	Criteria
Assembly	1) Mount the element to the deflector and rotate the baffle in the arrow direction to mount the element to the baffle. Then insert the element assembly into the bowl assembly and rotate in either direction so that the protruded part of the element assembly engages with the recessed part of the bowl assembly. Mount the bowl assembly referring to the section [10-1. Bowl Assembly Replacement] (P24).	-	-

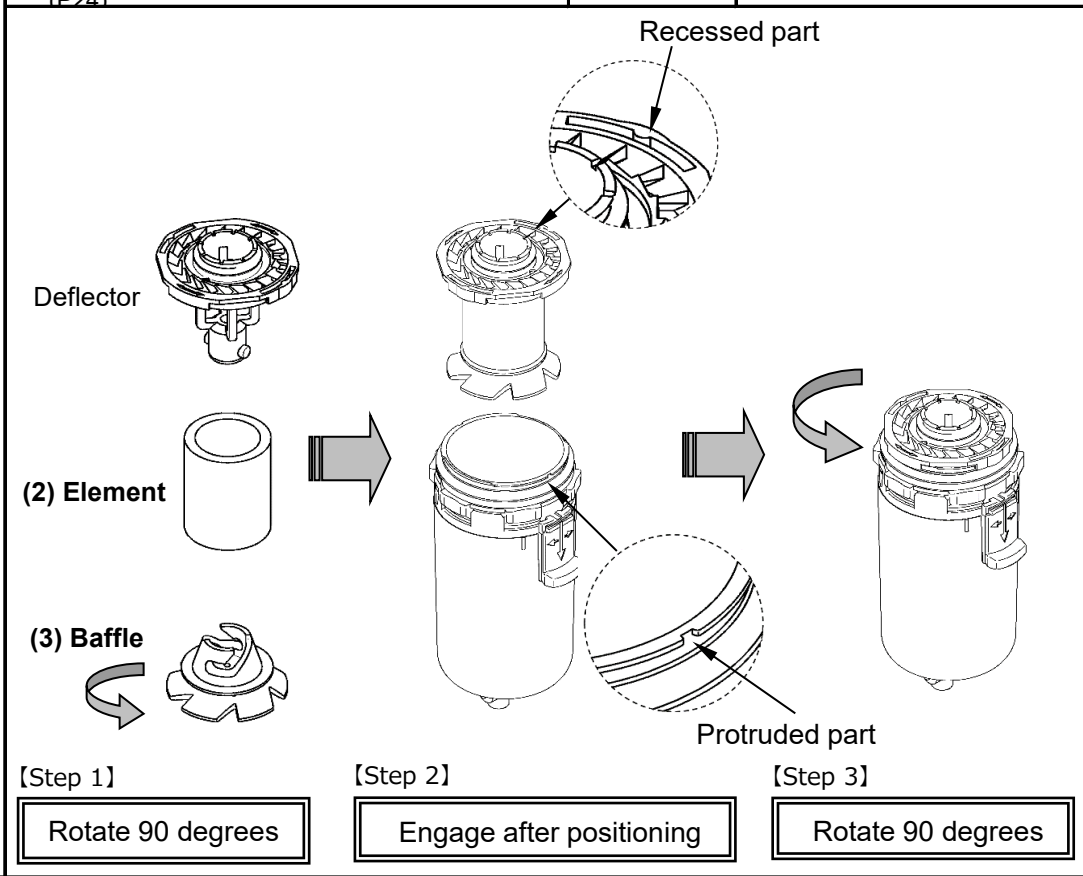

Applicable model	Work category	Step	Tool	Criteria
AF50-D AF60-D	Disassembly	1) Remove the bowl assembly referring to the section [10-1. Bowl Assembly Replacement] (P25). When the bowl assembly is removed, rotate the baffle to the left to remove the element.	-	-

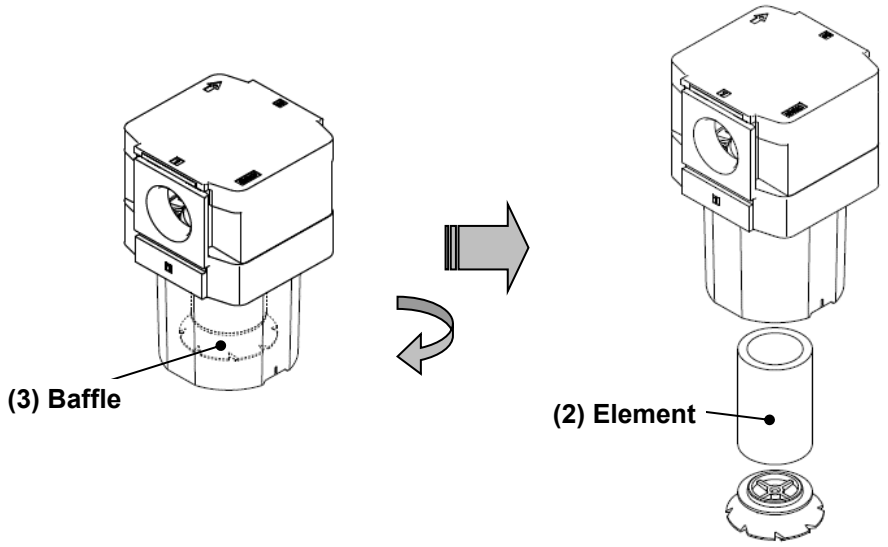

Work category	Step	Tool	Criteria
Assembly	1) Assemble the element and baffle. Then, assemble the baffle to the rod by rotating it to the right by hand. Rotate the baffle until the element is set without play. Then, rotate the baffle another 1/2 turn to the right. Refer to the tightening torque in the Criteria when tightening by hand. Mount the bowl assembly referring to the section [10-1. Bowl Assembly Replacement] (P25).	-	Reference tightening torque: 1.8 N m

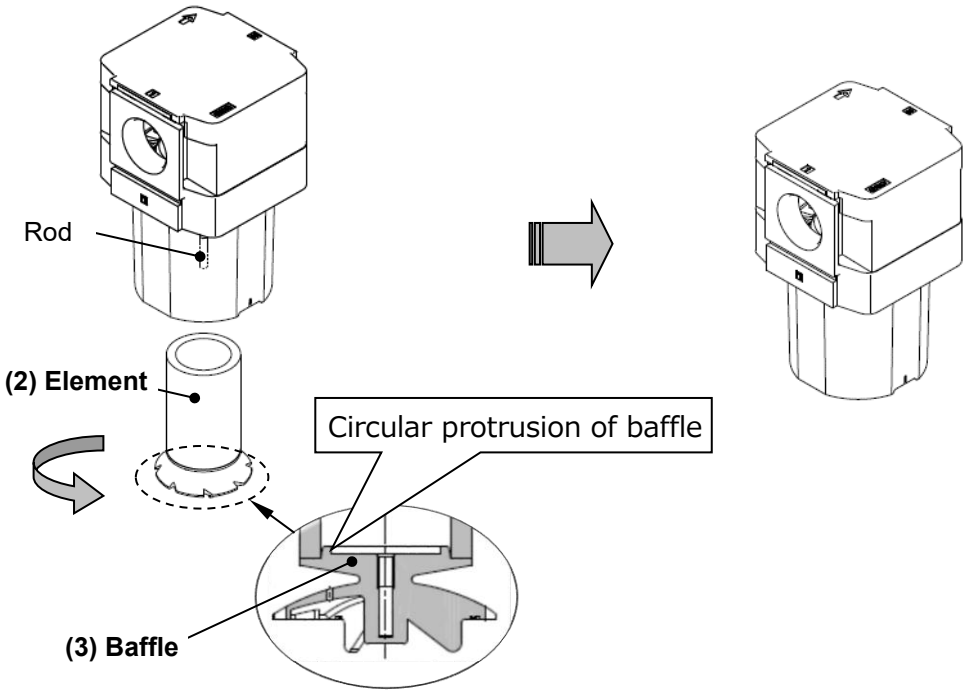

11. Disassembly Drawing

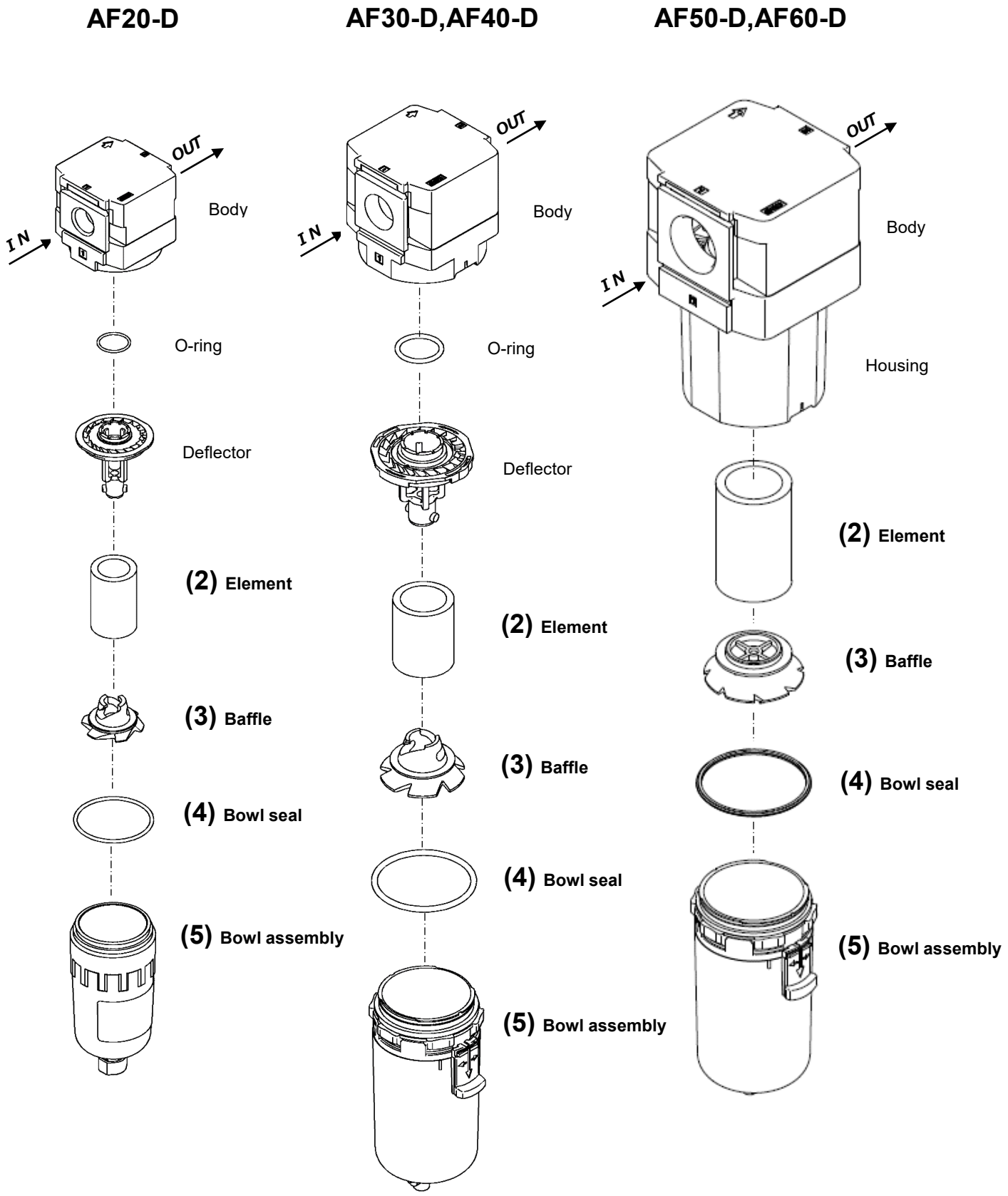

12. Dimensions

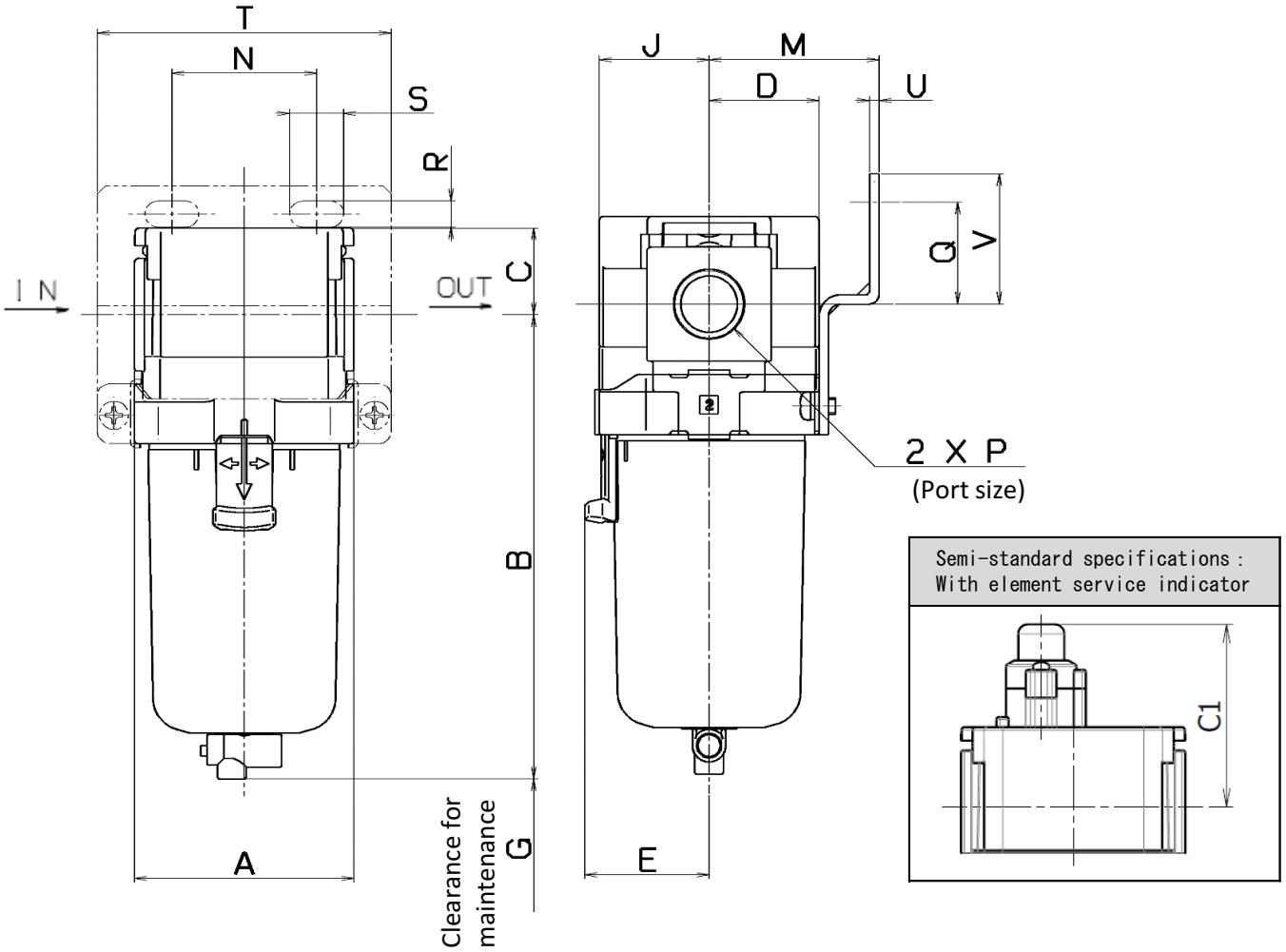

Model	Standard specifications								Optional specifications								
									Bracket mount								With auto drain
	P	A	B	C	D	E	G	J	M	N	Q	R	S	T	U	V	B
AF20-D	1/8, 1/4	40	87.6	17.5	21	-	25	21	30	27	22	5.4	8.4	60	2.3	28	104.9
AF30-D	1/4, 3/8	53	115.4	21.5	26.5	30	35	26.5	41	35	25	6.5	13	71	2.3	32	157.1
AF40-D	1/4, 3/8, 1/2	70	147.1	25.5	35.5	38.4	40	35.5	50	52	30	8.5	12.5	88	2.3	39	186.9
AF40-06-D	3/4	75	149.1	27	35.5	38.4	40	35.5	50	52	34	8.5	12.5	88	2.3	43	188.9
AF50-D	3/4, 1	90	220.1	32	45	-	30	45	70	66	40.5	11	13	113	3.2	52.5	259.9
AF60-D	1	95	234.1	32	45	-	30	45	70	66	40.5	11	13	113	3.2	52.5	273.9

Model	Semi-standard specifications							
	PC/PA bowl		Metal bowl		Metal bowl with level gauge		With element service indicator	
	With barb fitting	With drain guide	With drain cock	With drain guide	With drain cock	With drain guide		
	B	B	B	B	B	B	A	C1
AF20-D	-	91.4	87.4	93.9	-	-	40	50.6
AF30-D	123.9	122.2	117.8	122.3	137.8	142.3	53	54.3
AF40-D	155.6	153.9	149.5	154	169.5	174	70	58.3
AF40-06-D	157.6	155.9	151.5	156	171.5	176	-	-
AF50-D	228.6	226.9	222.5	227	242.5	247	90	64.3
AF60-D	242.6	240.9	236.5	241	256.5	261	90	64.3

Revision history	
A	40-06,50,60 size added, Corrected. Dec. 2020.
B	Changed the figure, Corrected. Mar. 2021.
C	Element service indicator specification added. Sep. 2021
D	Changed the nylon bowl assembly number. (30,40 size) Nov. 2023

SMC Corporation
4-14-1, Sotokanda, Chiyoda-ku, Tokyo 101-0021 JAPAN
Tel: + 81 3 5207 8249 Fax: +81 3 5298 5362
URL https://www.smcworld.com

Note: Specifications are subject to change without prior notice and any obligation on the part of the manufacturer.
© 2019 SMC Corporation All Rights Reserved