Vertraulich / confidential

REVISIONS			
REV.	ZONE	DESCRIPTION	NOTICE OF CHANGE No.
A	A9, B7, E9, F11, G5, G7	Specifications updated. Pos.20 changed: part list, diagram and tightening torques updated. Sticker updated.	

A SPECIFICATIONS

GENERAL

Design and manufacturing :
According to ISO 4413

Housing material :
steel

Surface protection :
Blacknite®

Ambient temperature range :
Min -20°C
Max +40°C

CONNECTIONS

For couplings with stud thread
DIN 3852 part 2 and
DIN 3852 part 11 form E.
Threads acc. to ISO 228-1.

P1, P2, T3: G3/4"
T1, T2: G1"
M: G1/4"

HYDRAULIC

Working pressure range :
max. 330 bar

Flow rate :
max. 80 l/min

Pressure fluid :
Hydraulic oil to DIN 51524 part 1 and 2

Fluid temperature range :
Min -20°C
Max +80°C

Viscosity range :
Recommended from 10 mm²/s to 500 mm²/s

Filtration :
Maximum permissible contamination level of operating fluid to ISO 4406 class 19/17/14. We therefore recommend using a filter with a minimum filtration grade of $\beta_{10} \geq 200$. The installation and regular replacement of the filter elements safeguards the performance, reduces wear and tear and increases the life expectancy of the unit.

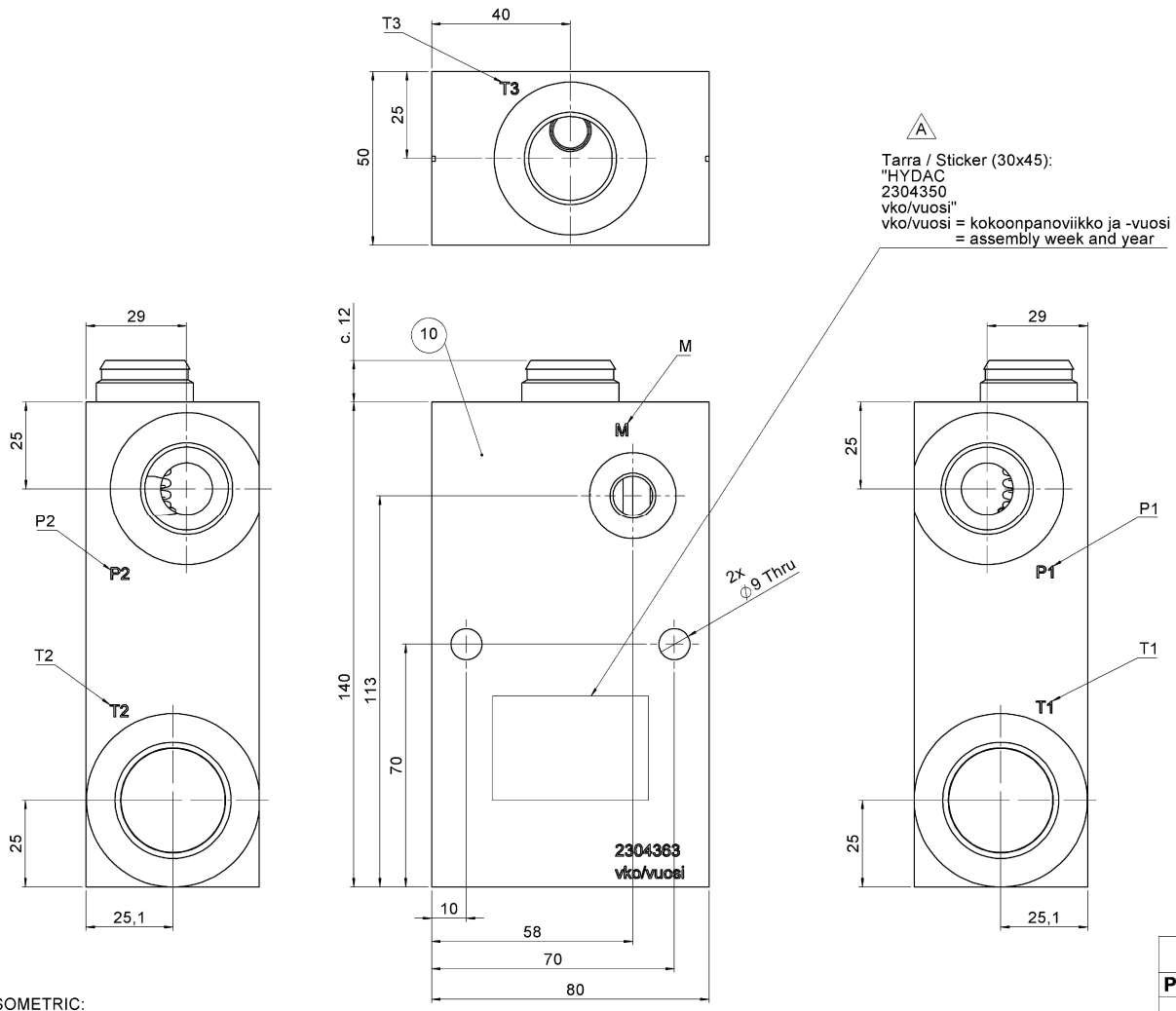

ISOMETRIC:

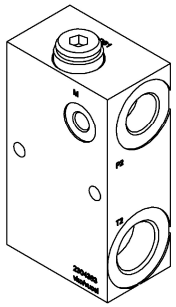

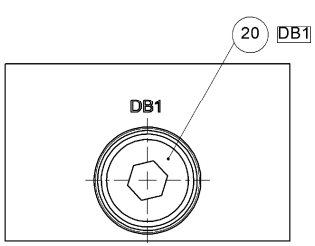

A Diagram:

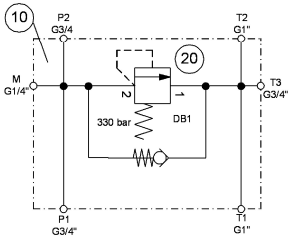

A

Kiristysmomentit [Nm] ja avainväli [mm (tuumaa)] Tightening torques [Nm] and wrench sizes [mm (inch)]			
Pos. no.	**Torque [Nm]**	**Avainväli Wrench size [mm] / (inch)**	**Notes**
20 (DB1)	50-55	Allen 10	

Part list A

Pos.	Pcs	Description	Type	Part No	Notes
10	1	Manifold		2304363	
20	1	Pressure relief valve	DBV+Antikavitationsvent.PCE080-330-B&P	6227828	DB1

HYDAC ADA Version	Werkstückkanten Corners ISO13715			Allgemeintoleranzen / General tolerances ISO 2768 - m	SIZE ISO 14405 (E)
			Oberflächenbeschaffenheit Surface quality ISO 1302	Form u. Lagetoleranz / Toleranzklasse Geometrical tolerances / Tolerance class (H)	
				Längenmaße / linear dimensions (mm)	
				über/over 0,5 3 6 30 120 400 1000 2000 bis /to 3 6 30 120 400 1000 2000 4000 ±0,1 ±0,1 ±0,2 ±0,3 ±0,5 ±0,8 ±1,2 ±2,0	
			1:1	Werkstoff / Material siehe Zeichnung see drawing	Masse / Mass 3,546 KG
A	11.07.2022	PUHAKKJ	1050123	Auftr.-Entw.-Projekt-Nr. Ord.-Devel.-Project-No	Maßstab Fertigmaße / Finished size 80X152X50
Anz. No Vers.	gepr.am Chkd. on geänd. am Modif. on	gepr. von Chkd. by geänd. von Modif. by	Ä.M.Nr. Notice of change No	Teil / Part 000	Datum / Date	Name / Name
Vers.	11.07.2022	KARLENN		gez./Drawn	06.02.2017	MIKKOLJ
				gepr./Chkd.	06.02.2017	LAUTTAT

HYDAC HYDAC OY

Blatt von Sheet of 1 / 1	Benennung / Description	Zeichn.-Nr Draw.-No 02304350
Format/ Size A2	VALVE GROUP PRV 1, 330bar, LAK.HYDRO	alte Mat Nr. /Old Mat No.
SW-Vers. 2020	VENTTIILISTÖ PRV 1, 330bar, LAK.HYDRO	alte Dok Nr. /Old Doc No.
		Ers. für /Exchange for
		Ers. durch /Replaced by

Schutzvermerk ISO 16016 beachten / Observing of protection notice ISO 16016

V9