Vertraulich / confidential

REVISIONS			
REV.	ZONE	DESCRIPTION	NOTICE OF CHANGE No.
A	A6, A9, E9, F11, G6, G7	Specifications updated. Pos.20 changed: part list, diagram and tightening torques updated. Sticker updated.	

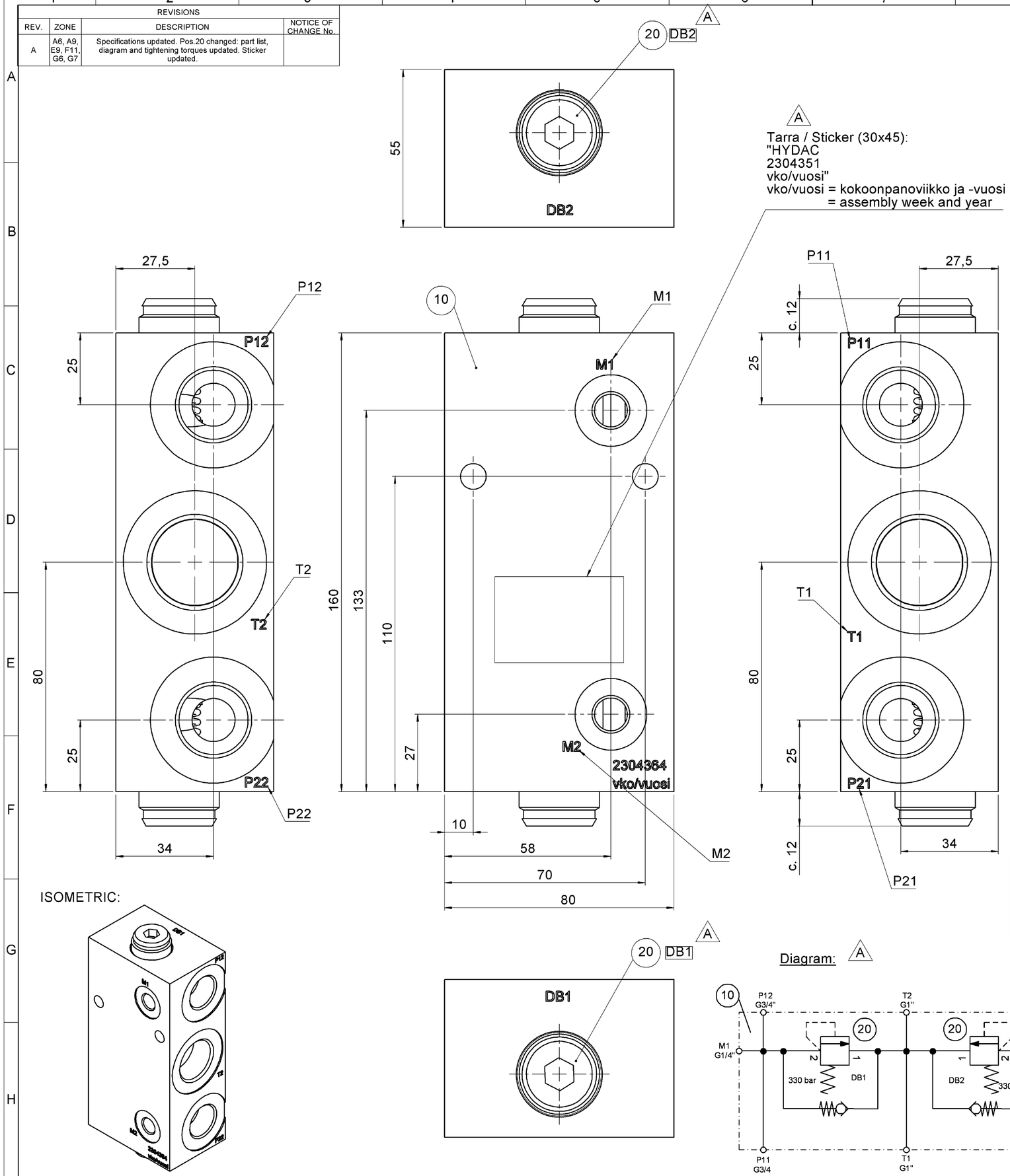

ISOMETRIC:

Diagram: A

A SPECIFICATIONS

GENERAL

Design and manufacturing :
According to ISO 4413

Housing material :
steel

Surface protection :
Blacknite®

Ambient temperature range :
Min -20°C
Max +40°C

CONNECTIONS

For couplings with stud thread
DIN 3852 part 2 and
DIN 3852 part 11 form E.
Threads acc. to ISO 228-1.

P11, P12, P21, P22: G3/4"
T1, T2: G1"
M1, M2: G1/4"

HYDRAULIC

Working pressure range :
max. 330 bar

Flow rate :
max. 80 l/min

Pressure fluid :
Hydraulic oil to DIN 51524 part 1 and 2

Fluid temperature range :
Min -20°C
Max +80°C

Viscosity range :
Recommended from 10 mm²/s to 500 mm²/s

Filtration :
Maximum permissible contamination level of operating fluid to ISO 4406 class 19/17/14. We therefore recommend using a filter with a minimum filtration grade of $\beta_{10} \geq 200$. The installation and regular replacement of the filter elements safeguards the performance, reduces wear and tear and increases the life expectancy of the unit.

A

Kiristysmomentit [Nm] ja avainväli [mm (tuumaa)]
Tightening torques [Nm] and wrench sizes [mm (inch)]

Pos. no.	Torque [Nm]	Avainväli Wrench size [mm] / (inch)	Notes
20 (DB1, DB2)	50-55	Allen 10	

Part list A

Pos.	Pcs	Description	Type	Part No	Notes
10	1	Manifold		2304364	
20	2	Pressure relief valve	DBV+Antikavitationsvent.PCE080-330-B&P	6227828	DB1, DB2

HYDAC ADA Version
Werkstückkanten Corners ISO13715
Oberflächenbeschaffenheit Surface quality ISO 1302
Allgemeintoleranzen / General tolerances ISO 2768 - m SIZE ISO 14405 (E)
Form u. Lagetoleranz / Toleranzklasse Geometrical tolerances / Tolerance class (H)
Längenmaße / linear dimensions (mm)

über/over	0,5	3	6	30	120	400	1000
bis /to	3	6	30	120	400	1000	2000
	±0,1	±0,1	±0,2	±0,3	±0,5	±0,8	±1,2

Anz. No Vers. Vers.	gepr.am Chkd. on geänd. am Modif. on	gepr. von Chkd. by geänd. von Modif. by	Ä.M.Nr. Notice of change No	Teil / Part 000	Datum / Date	Name / Name
A	11.07.2022 11.07.2022	PUHAKKJ KARLENN	1050135	gez./Drawn	06.02.2017	MIKKOLJ
				gepr./Chkd.	06.02.2017	LAUTTAT

Auftr.-Entw.-Projekt-Nr. Ord.-Devel.-Project-No
1:1 Maßstab
Werkstoff / Material siehe Zeichnung see drawing
Masse / Mass 4,494 KG
Fertigmaße / Finished size 80X184X55

Blatt von Sheet of 1 / 1
Format/Size A2
SW-Vers. 2020

Benennung / Description
VALVE GROUP PRV 2, 330bar, LAK.HYDRO
VENTTIILISTÖ PRV 2, 330bar, LAK.HYDRO

HYDAC HYDAC OY

Zeichn.-Nr Draw.-No 02304351
alte Mat Nr. /Old Mat No.
alte Dok Nr. /Old Doc No.
Ers. für / Exchange for
Ers. durch / Replaced by

Schutzvermerk ISO 16016 beachten / Observing of protection notice ISO 16016

V9